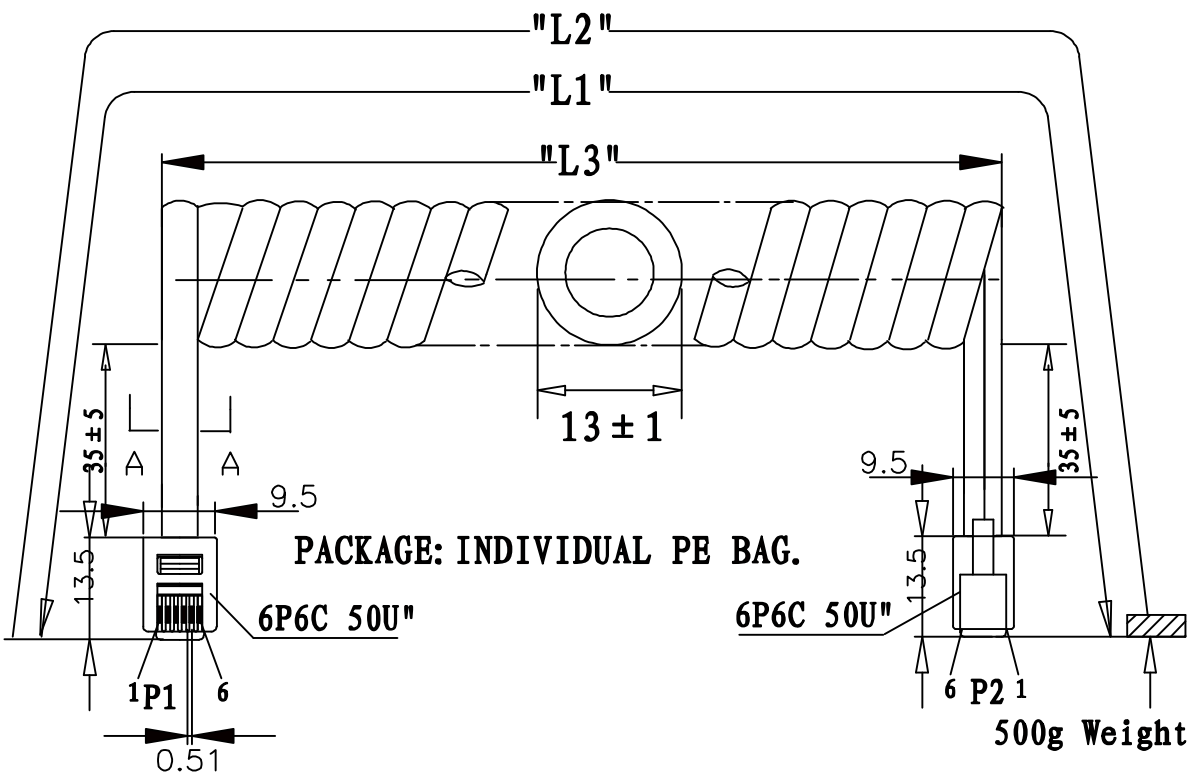

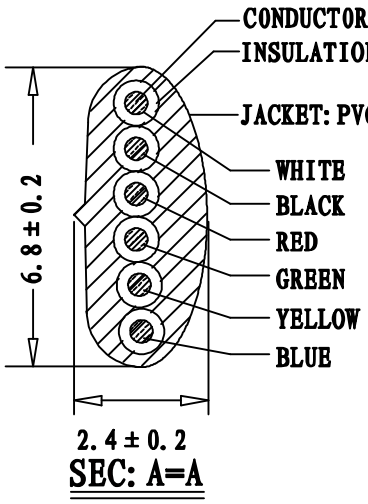

NOTE FOR PLUG:
MATERIAL: HOUSING-POLYCARBONATE, CLEAR.
TERMINAL-0.36[.014] THICK PHOSPHOR BRONZE.
THICK GOLD IN LOCALIZED GOLD PLATE.
AREA, GOLD FLASH OVER THE REMAINDER.
OVER 2.54um[.000100] THICK NICKEL
UNDERPLATE.

P1		P2
1	WHITE	6
2	BLACK	5
3	RED	4
4	GREEN	3
5	YELLOW	2
6	BLUE	1

PART NO	DRAWING NO	BUYER COLOR	VENDOR COLOR	RETRACTED LENGTH ("L3")	CUSTOMER Accepted ("L2")	CUT LENGTH "L2"
520-26-6600-SV-0005F	A	Silver	S49-1 LIGHT	540 ± 50	5.0FT-5.75FT	2600-2700
520-26-6600-SV-0007F	B	Silver	S49-1 LIGHT	740 ± 50	7.0FT-8.05FT	3700-3900
520-26-6600-SV-0010F	C	Silver	S49-1 LIGHT	1000 ± 50	10.0FT-11.5FT	5000-5200
520-26-6600-SV-0012F	D	Silver	S49-1 LIGHT	1300 ± 50	12.0FT-13.8FT	6400-6600
520-26-6600-SV-0014F	E	Silver	S49-1 LIGHT	1350 ± 50	14.0FT-16.1FT	6900-7100
520-26-6600-SV-0025F	F	Silver	S49-1 LIGHT	3400 ± 50	25.0FT-28.75FT	13200-13400

REVISE	VERSION	BASIS	CONTENTS
12-02-20	A/0	T0210A	NEW DRAWING

CnC Tech, LLC
Industrial Cable and Connector Technology

IDRAWING NO: 671-304		CUSTOMER: L-671
ITEM NO: 6C COILD CORD P+P PLUG		UNIT: mm
DATE: 2012-02-20		ISSUE: (A/0)
DRAWN:	QE:	QA:
SALES DEPT:	SALES MANAGER:	