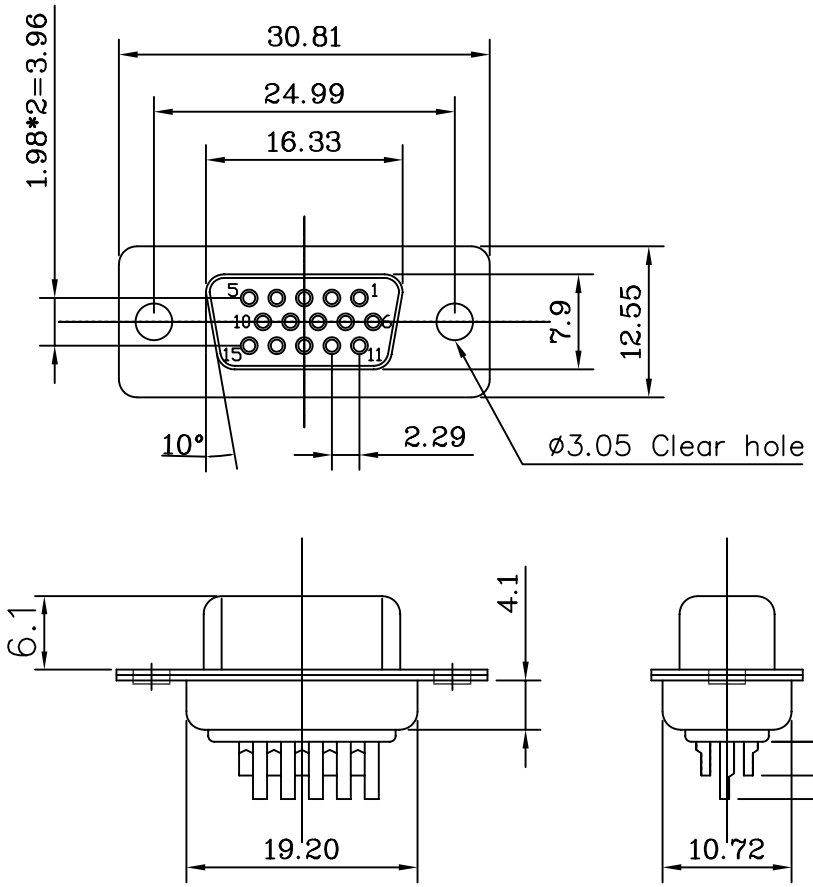

TECHNICAL DATA

D-SUBMINIATURE CONNECTORS

Product Specification

Material

Insulator : Glass-Filled Thermoplastic PBT,UL94V-0 rated

Contact : Copper alloy

Shell : SPCC

Electrical

Contact Resistance : 20 milliohms Max at 1 AMP DC.

Insulation Resistance : 1000 magohms at 500 VDC

Dielectric Withstanding Voltage : 1000 VAC/rms 60Hz for 1 minute

Current Rating : 1 AMP

Volatge Rating : 250 VAC/rms 60Hz

PRODUCT CODE

L 77 HD E 15 S

- L: RoHS Compliance
- Tinned Shell For Receptable
- HIGH DENSITY
- Shell size: E
- Configuration: 15
- Contact Type: S=Socket

Amphenol		TOL. GEN. : +/-0.30								
		VOLUME:								
		AREA:								
		PLATING:								
SERIES		TREATMENT:								
NUMBER SERIES Solder Cup Series		MATERIAL:			origin drawing	Roger	10/18'06	Lik	A
	FILE:		CUSTOMER		MODIFICATIONS	DRAW	DATE	APPROVE	IND.
DATE 2006.10.18	DESIGNATION Solder Cup Type HD 15 Socket D-SUB CONNECOTR		INTERNAL PART NUMBER L77HDE15S						