THIS DRAWING IS UNPUBLISHED. RELEASED FOR PUBLICATION -,- .
© COPYRIGHT - BY TYCO ELECTRONICS CORPORATION. ALL RIGHTS RESERVED.

LOC	DIST
AD	00

REVISIONS

P	LTR	DESCRIPTION	DATE	DWN	APVD
	B	ECO-07-001843	23APR07	MB	JO

1. TYCO TRADEMARK AND CSA LOGO ARE MOLDED IN TO HOUSING. MARK DATE CODE AND PART NUMBER, IN APPROXIMATE LOCATION SHOWN, IN .058±.015 HIGH, BLACK CHARACTERS AS PART SIZE PERMITS. THE ORDER AND LOCATION IS OPTIONAL.
2. HOUSING: GLASS FILLED, FLAME RETARDANT POLYESTER; COLOR: BLACK
   CONTACT: PHOS BRONZE
   VACUUM COVER: ALUMINUM
3. CONTACT FINISH: 0.76µm[.000030] GOLD DUPLEX, BIRIGHT TIN-LEAD
4. POINT OF CONTACT.
5. POINT OF MEASUREMENT FOR PLATING THICKNESS (INSIDE OF CONTACT BEAM).
6. 5.5[.217] MIN TARGET AREA FOR VACUUM PICKUP. COVERS TO BE REMOVED AFTER SOLDERING.
7. PACKAGED IN TAPE AND REEL PER EIA 481 SPECIFICATION.
8. ROHS 2002/95/EC COMPLIANT
9. CONTACT FINISH: 0.76µm[.000030] GOLD DUPLEX, MATTE TIN

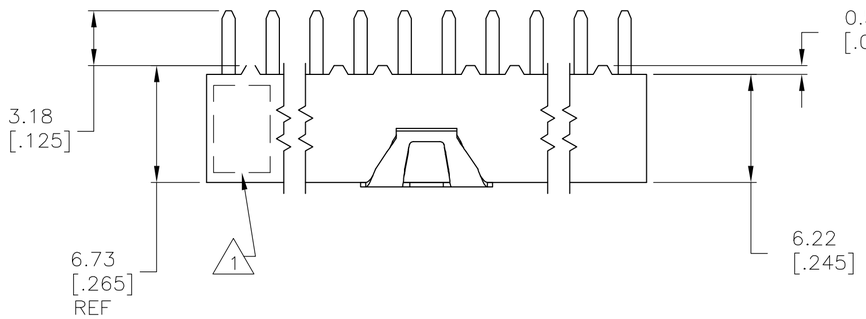

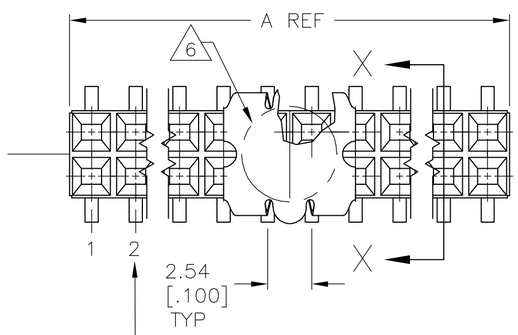

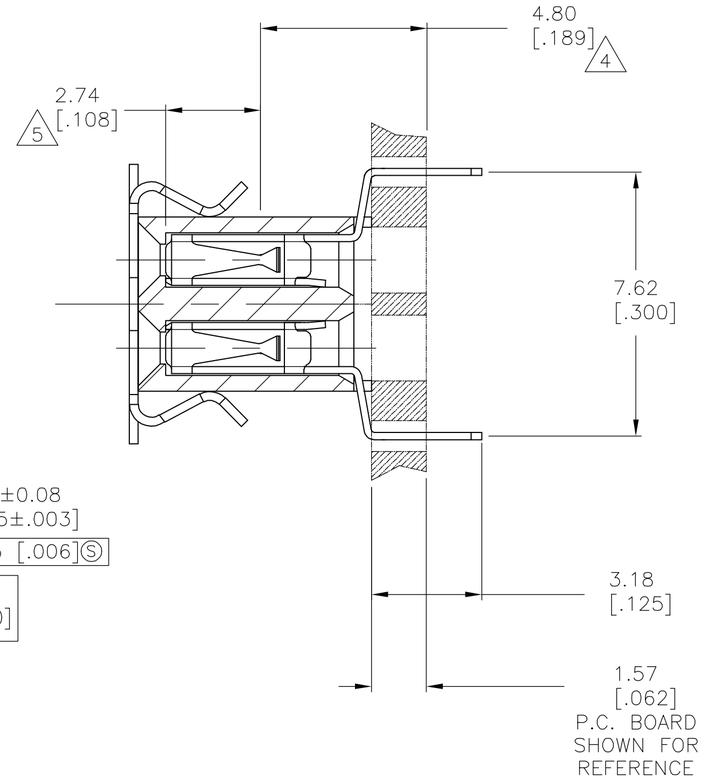

SECTION X-X

SCALE 8:1

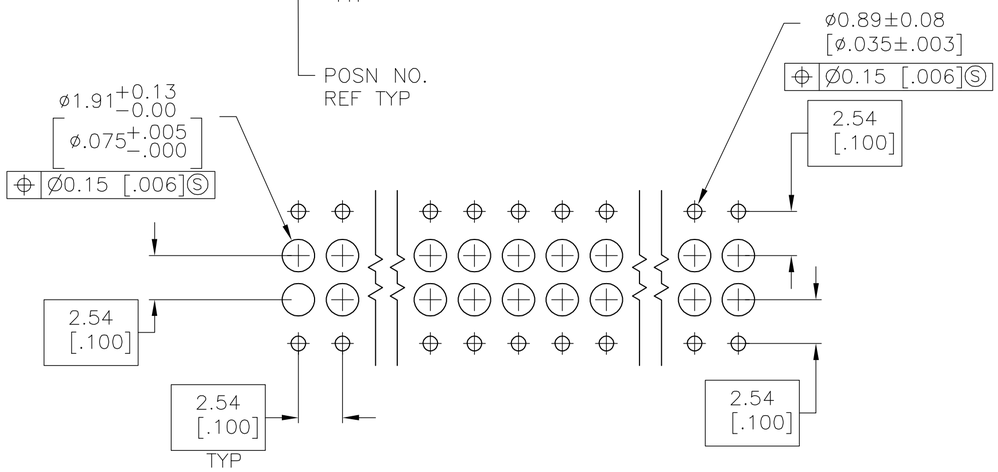

RECOMMENDED HOLE LAYOUT

8 9	72mm	38.10 [1.500]	30	6-1571345-5
3	72mm	38.10 [1.500]	30	1-1571345-5
FINISH	EIA TAPE WIDTH	A	NO OF POSN	PART NUMBER

THIS DRAWING IS A CONTROLLED DOCUMENT.

DIMENSIONS: mm [INCHES]

TOLERANCES UNLESS OTHERWISE SPECIFIED:
0 PLC ± -
1 PLC ± -
2 PLC ± -
3 PLC ± .005
4 PLC ± -
ANGLES ± -

MATERIAL 2

FINISH SEE TABLE

DWN M.BINNER 06AUG02
CHK J.OLSON -
APVD J.OLSON -
PRODUCT SPEC —
APPLICATION SPEC —
WEIGHT —

Tyco Electronics
Tyco Electronics Corporation
Harrisburg, PA 17105-3608

NAME
RECEPTACLE ASSY, MOD IV, DBL ROW, .100 x .100 VERTICAL MOUNT, .300 WIDE TINE SPACING, HIGH TEMP

SIZE	CAGE CODE	DRAWING NO	RESTRICTED TO
A2	00779	C-1571345	—

CUSTOMER DRAWING | SCALE 4:1 | SHEET 1 OF 1 | REV B

1571345