| Identification | Cable entry | Part number Low construction | Part number High construction | Drawing Dimensions in mm |
|---|---|---|---|---|
| Han® B,<br>Surface mounted housings,<br>side entry,<br>Han-Easy Lock®,<br>with metal cover<br> | 2xM25<br>2xM32 | 19 30 016 2296 | 19 30 016 7297 | 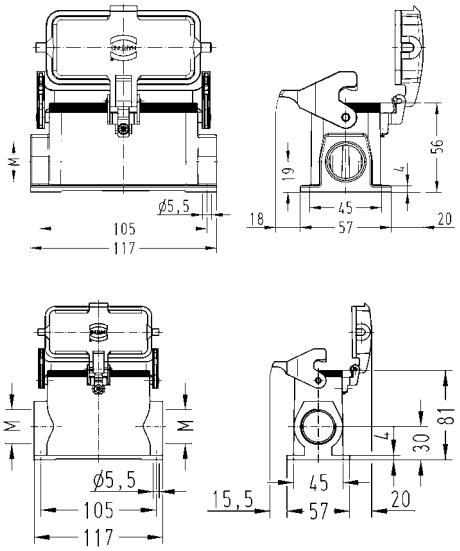 |
| Han® B,<br>Cable to cable housings,<br>top entry,<br>Han-Easy Lock®<br> | 1xM25<br>1xM32 | 19 30 016 1751<br>19 30 016 1752 | 19 30 016 0757 | 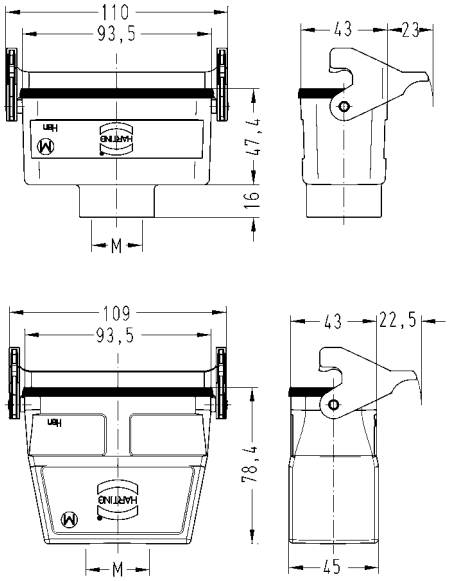 |