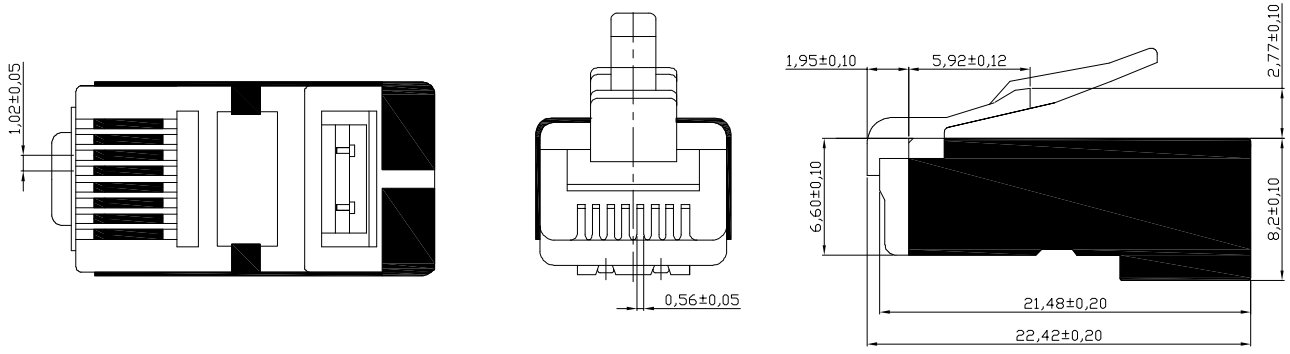

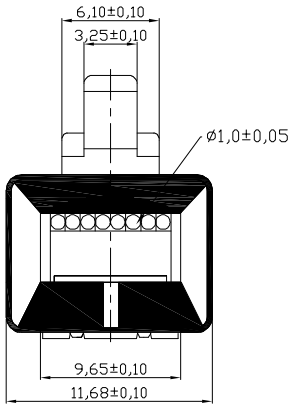

Specifications:

Material:
Housing: Poly Carbonate(PC) UL94V-2
Contact blade: High strength copper alloy
100 micron Nickel underplated
Plating type: 8% Phosphor Bronze
Plating thickness: 6u" gold plated
Operating temperature: -40°C to +125°C

Electrical:
Current rating: 250V AC max. at 2A
Dielectric: 500V AC
Insulation resistance: 500MΩ

Complies with FCC68/F

RoHS compliant
Unit: mm

Scale	Free						Date	Name
TOLERANCE						Drawn	05.05.2016	Amy
						Approved	05.05.2016	Amy
DIM	TOL							
		⓪	Drawn	05.05.2016	Amy			
Angle	TOL	Id.	Modification	Date	Name			

ASSMANN wsw components

Customer-No.

ASSMANN WSW-No. A-MO 8/8-SFS

Drawing-No. ASS 7231 CO rev00

Replace Sheet