THIS DRAWING IS UNPUBLISHED. RELEASED FOR PUBLICATION – –, .
© COPYRIGHT – By – ALL RIGHTS RESERVED.

LOC	DIST
FT	47

REVISIONS

P	LTR	DESCRIPTION	DATE	DWN	APVD
	J1	REVISED PER ECO-11-005027	11MAR11	RK	HMR

1. WIRE RANGE 18–16 AWG.
2. COLOR CODED BLUE IN SPRING DIMPLE AREA.
3. 0.76μm [.000030] MIN GOLD PER MIL-G-45204 ON MATING END FOR A LENGTH OF 5.08 [.200] MIN WITH A UNIFORM GRADIENT TO 0.25μm [.000010] MIN GOLD PER MIL-G-45204 ON INSULATION SUPPORT BARREL OVER 0.76μm [.000030] MIN NICKEL PER QQ-N-290.

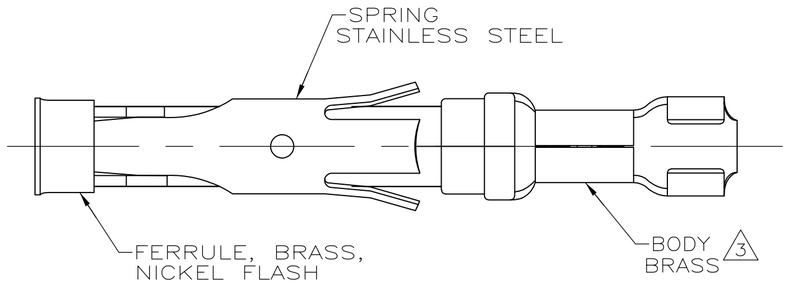

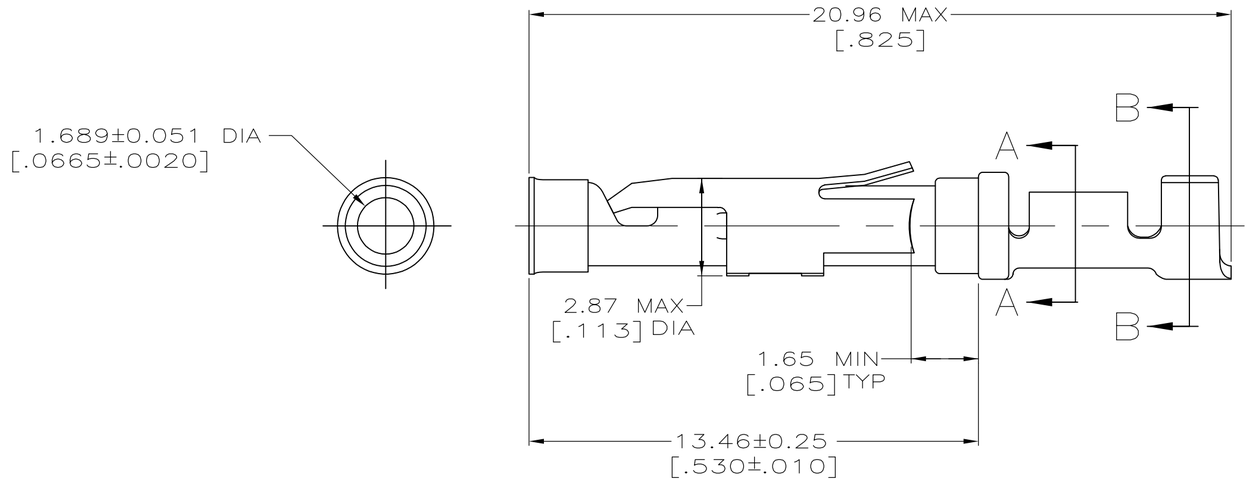

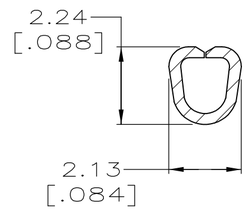

SECTION A–A

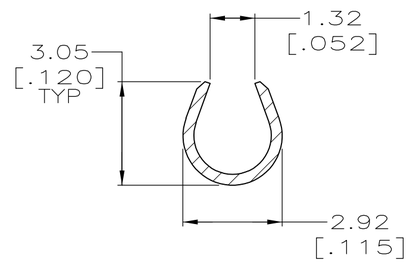

SECTION B–B

66181

SMALL PACK	66181–3
STANDARD	66181–1
PACKAGING TYPE	PART NO

THIS DRAWING IS A CONTROLLED DOCUMENT.

DIMENSIONS: MM[INCHES]

TOLERANCES UNLESS OTHERWISE SPECIFIED:
0 PLC ± –
1 PLC ± –
2 PLC ± 0.13[.005]
3 PLC ± –
4 PLC ± –
ANGLES ± –

MATERIAL: SEE CALLOUTS
FINISH: SEE CALLOUTS

DWN R.SHIREY 7-29-91
CHK R.STONE 9-19-91
APVD J.WESTMAN 9-20-91
PRODUCT SPEC —
APPLICATION SPEC —
WEIGHT —

TE Connectivity

NAME: SOCKET ASSEMBLY, LOOSE PIECE, TYPE III+

SIZE	CAGE CODE	DRAWING NO	RESTRICTED TO
A2	00779	C-66181	—

CUSTOMER DRAWING | SCALE 8:1 | SHEET 1 OF 1 | REV J1

1471-9 (3/11)