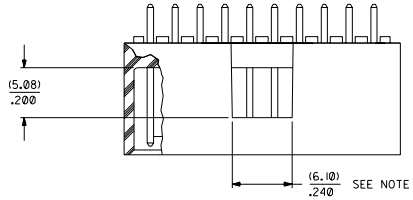

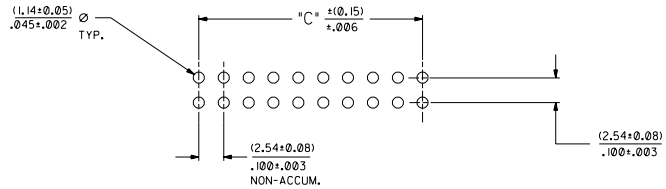

RECOMMENDED P.C. BOARD HOLE LAYOUT

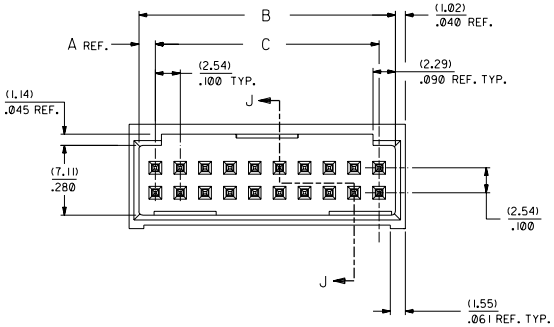

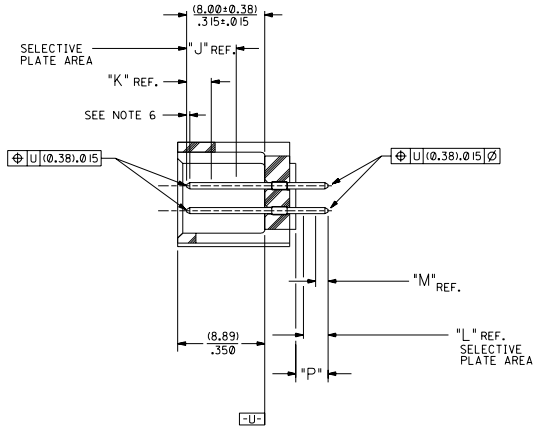

SECTION J-J

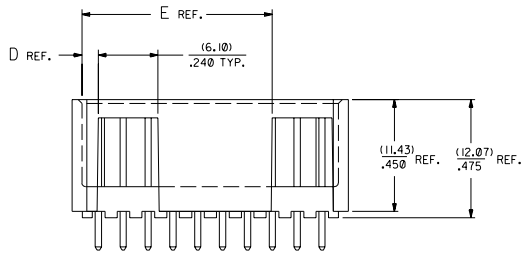

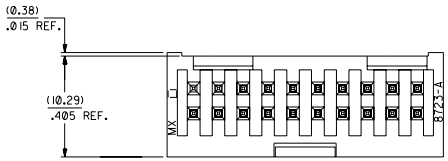

CKT.	DIM. "A"	DIM. "B"	DIM. "C"	DIM. "D"	DIM. "E"			
06	(1.68) .066	(8.43) .332	(5.08) .200	(1.68) .066				
08	(1.68) .066	(10.97) .432	(7.62) .300	(1.68) .066				
10	(1.68) .066	(13.51) .532	(10.16) .400	(4.22) .166				
12	(1.68) .066	(16.05) .632	(12.70) .500	(4.22) .166				
14	(1.68) .066	(18.59) .732	(15.24) .600	(6.76) .266				
16	(1.68) .066	(21.13) .832	(17.78) .700	(6.76) .266				
18	(1.68) .066	(23.67) .932	(20.32) .800	(9.30) .366				
20	(1.68) .066	(26.21) 1.032	(22.86) .900	(1.68) .066	(19.46) .766			
22	(1.68) .066	(28.75) 1.132	(25.40) 1.000	(1.68) .066	(22.00) .866			
24	(1.68) .066	(31.29) 1.232	(27.94) 1.100	(1.68) .066	(24.54) .966			
26	(1.68) .066	(33.83) 1.332	(30.48) 1.200	(1.68) .066	(27.08) 1.066			
28	(1.68) .066	(36.37) 1.432	(33.02) 1.300	(1.68) .066	(29.62) 1.166			
30	(1.68) .066	(38.91) 1.532	(35.56) 1.400	(1.68) .066	(32.16) 1.266			
32	(1.68) .066	(41.45) 1.632	(38.10) 1.500	(1.68) .066	(34.70) 1.366			
34	(1.68) .066	(43.99) 1.732	(40.64) 1.600	(1.68) .066	(37.24) 1.466			
36	(1.68) .066	(46.53) 1.832	(43.18) 1.700	(1.68) .066	(39.78) 1.566			
38	(1.68) .066	(49.07) 1.932	(45.72) 1.800	(1.68) .066	(42.32) 1.666			
40	(1.68) .066	(51.61) 2.032	(48.26) 1.900	(1.68) .066	(44.86) 1.766			
42	(1.68) .066	(54.15) 2.132	(50.80) 2.000	(1.68) .066	(47.40) 1.866			
44	(1.68) .066	(56.69) 2.232	(53.34) 2.100	(1.68) .066	(49.94) 1.966			
46	(1.68) .066	(59.23) 2.332	(55.88) 2.200	(1.68) .066	(52.48) 2.066			
48	(1.68) .066	(61.77) 2.432	(58.42) 2.300	(1.68) .066	(55.02) 2.166			
50	(1.68) .066	(64.31) 2.532	(60.96) 2.400	(1.68) .066	(57.56) 2.266			
52	(1.68) .066	(66.85) 2.632	(63.50) 2.500	(1.68) .066	(60.10) 2.366			
54	(1.68) .066	(69.39) 2.732	(66.04) 2.600	(1.68) .066	(62.64) 2.466			
56	(1.68) .066	(71.93) 2.832	(68.58) 2.700	(1.68) .066	(65.18) 2.566			
58	(1.68) .066	(74.47) 2.932	(71.12) 2.800	(1.68) .066	(67.72) 2.666			
60	(1.68) .066	(77.01) 3.032	(73.66) 2.900	(1.68) .066	(70.26) 2.766			
62	(1.68) .066	(79.55) 3.132	(76.20) 3.000	(1.68) .066	(72.80) 2.866			
64	(1.68) .066	(82.09) 3.232	(78.74) 3.100	(1.68) .066	(75.34) 2.966			
66	(1.68) .066	(84.63) 3.332	(81.28) 3.200	(1.68) .066	(77.88) 3.066			
68	(1.68) .066	(87.17) 3.432	(83.82) 3.300	(1.68) .066	(80.42) 3.166			
70	(1.68) .066	(89.71) 3.532	(86.36) 3.400	(1.68) .066	(82.96) 3.266			
72	(1.68) .066	(92.25) 3.632	(88.90) 3.500	(1.68) .066	(85.50) 3.366			

NOTES:

1- 20 CIRCUIT SIZE SHOWN FOR ILLUSTRATION PURPOSES.
2- PIN PUSHOUT FORCE: (17.79 N)/4 LBS.
3- PINS MUST MEET SOLDERABILITY SPEC. MIL-STD-202 METHOD 208B.
4- WINDOW NOT AVAILABLE ON 6 AND 8 CIRCUIT SIZE.
5- FOR CHARTED DIMENSIONS AND ASSEMBLY NO.S NOT SHOWN ON THIS SHEET - SEE SHEET 2.
6- ROW TO ROW PIN HEIGHT VARIATION MUST NOT EXCEED (0.13)/.005 IN.
7- PRODUCT CONFORMS TO PS-8723.

MATERIAL:

SHROUDED WAFER: GLASS FILLED POLYESTER, 94V-0; COLOR: BLACK.
PINS: PHOSPHOR BRONZE,
SEE SHEET 2 FOR FINISHES.

ASSEMBLY STYLE "A" AND "B"

U	ADD -9003 OPT UCP2004-2280 DMORGAN 04/05/20		
T	LEAD FREE UCP2004-1770 RLWHITE 04/04/26		
S	ADD -9002 OPTION ECN #UCP2004-052 DMORGAN 04/01/12		
R2	TAB DIF DIM 6 CIR ECN #UDT1999-0145 DMORGAN 98/09/01		
R1	ADD WDO LATCH NOTE ECN #UDT1998-0393 DMORGAN 98/06/23		
R	ADDED SHEET 7 PER ECR NO U61208 03-29-96	TSE	
Q	REMOVE EDP NO.'S PER ECR NO U58225 09-19-94	BJS	
P	CHGD WINDOW NOTES PER ECR NO U30376 05-04-93	BJS	
O	CHANGED MATERIAL PER ECR NO U30146 01-22-93	BJS	
N	REVISED & REDRAWN PER ECR NO U21073 05-26-92	BJS	
MFG.	SH.	REV.	LTR.

REVISIONS

7	U
6	T
5	R2
4	T
3	R2
2	T
1	U

▽ = 0 ▼ = 0 REVISE ONLY ON CAD SYSTEM

DIMENSIONS SHOWN (METRIC) INCH

UNLESS OTHERWISE SPECIFIED TOLERANCES: ANGULAR ± 1/2°

	INCH	METRIC
3 PLACE	± .005	---
2 PLACE	± .01	± 0.13
1 PLACE	---	± 0.25

DRAFT WHERE APPLICABLE MUST REMAIN WITHIN DIMENSIONS

DRWN. BY RB
APP'D. BY
CHK'D. BY
SCALE 4 : 1

TITLE
SALES ASSEMBLY
WAFER- STRAIGHT MT. FULLY SHROUDED
.100 GRID-FOR USE W/.025 SQ. PINS
WITH .066 END WALLS

MOLEX INCORPORATED
LISLE, ILL. 60532 U.S.A.

SHEET NO. 1 OF 7
DATE 92/07/17

PART NO. SEE CHART
DRWG. NO. SDA-8723-••••••

FILE NAME 8723A.1

THIS DRAWING CONTAINS INFORMATION THAT IS PROPRIETARY TO MOLEX INC. AND SHOULD NOT BE USED WITHOUT WRITTEN PERMISSION

DIV. DA
SIZE D

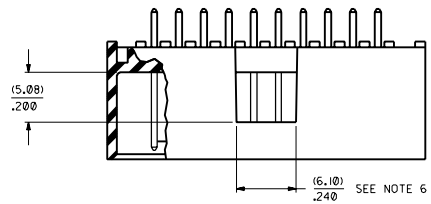

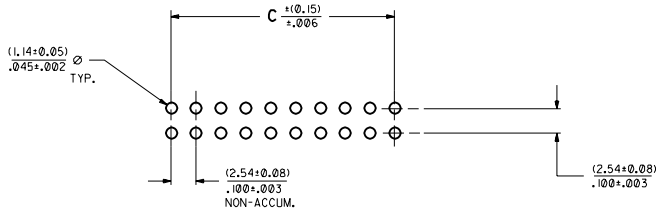

RECOMMENDED P.C. BOARD HOLE LAYOUT

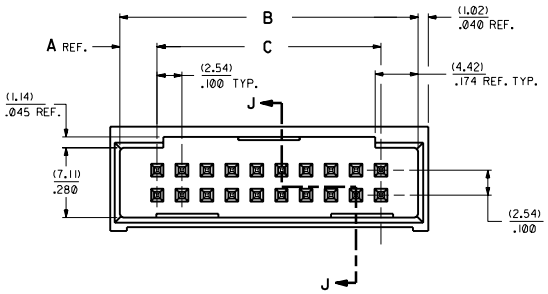

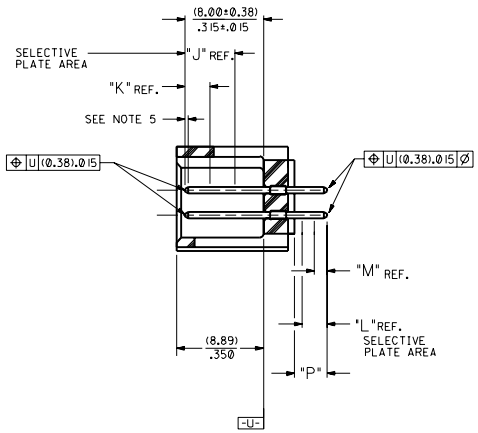

SECTION J-J

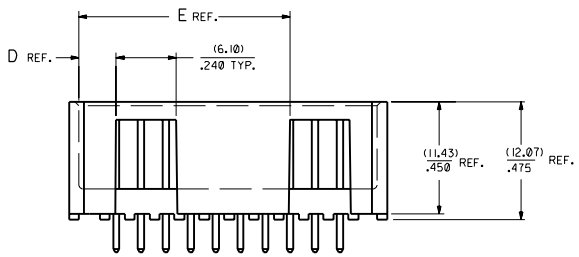

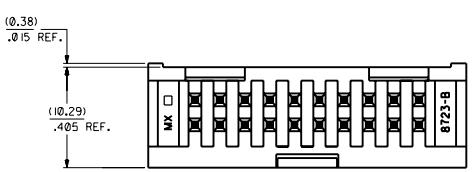

CKT.	DIM. "A"	DIM. "B"	DIM. "C"	DIM. "D"	DIM. "E"			
06	(3.81) .150	(12.70) .500	(5.08) .200	(3.81) .150				
08	(3.81) .150	(15.24) .600	(7.62) .300	(3.81) .150				
10	(3.81) .150	(17.78) .700	(10.16) .400	(6.35) .250				
12	(3.81) .150	(20.32) .800	(12.70) .500	(6.35) .250				
14	(3.81) .150	(22.86) .900	(15.24) .600	(8.89) .350				
16	(3.81) .150	(25.40) 1.000	(17.78) .700	(8.89) .350				
18	(3.81) .150	(27.94) 1.100	(20.32) .800	(11.43) .450				
20	(3.81) .150	(30.48) 1.200	(22.86) .900	(3.81) .150	(21.59) .850			
22	(3.81) .150	(33.02) 1.300	(25.40) 1.000	(3.81) .150	(24.13) .950			
24	(3.81) .150	(35.56) 1.400	(27.94) 1.100	(3.81) .150	(26.67) 1.050			
26	(3.81) .150	(38.10) 1.500	(30.48) 1.200	(3.81) .150	(29.21) 1.150			
28	(3.81) .150	(40.64) 1.600	(33.02) 1.300	(3.81) .150	(31.75) 1.250			
30	(3.81) .150	(43.18) 1.700	(35.56) 1.400	(3.81) .150	(34.29) 1.350			
32	(3.81) .150	(45.72) 1.800	(38.10) 1.500	(3.81) .150	(36.83) 1.450			
34	(3.81) .150	(48.26) 1.900	(40.64) 1.600	(3.81) .150	(39.37) 1.550			
36	(3.81) .150	(50.80) 2.000	(43.18) 1.700	(3.81) .150	(41.91) 1.650			
38	(3.81) .150	(53.34) 2.100	(45.72) 1.800	(3.81) .150	(44.45) 1.750			
40	(3.81) .150	(55.88) 2.200	(48.26) 1.900	(3.81) .150	(46.99) 1.850			
42	(3.81) .150	(58.42) 2.300	(50.80) 2.000	(3.81) .150	(49.53) 1.950			
44	(3.81) .150	(60.96) 2.400	(53.34) 2.100	(3.81) .150	(52.07) 2.050			
46	(3.81) .150	(63.50) 2.500	(55.88) 2.200	(3.81) .150	(54.61) 2.150			
48	(3.81) .150	(66.04) 2.600	(58.42) 2.300	(3.81) .150	(57.15) 2.250			
50	(3.81) .150	(68.58) 2.700	(60.96) 2.400	(3.81) .150	(59.69) 2.350			
52	(3.81) .150	(71.12) 2.800	(63.50) 2.500	(3.81) .150	(62.23) 2.450			
54	(3.81) .150	(73.66) 2.900	(66.04) 2.600	(3.81) .150	(64.77) 2.550			
56	(3.81) .150	(76.20) 3.000	(68.58) 2.700	(3.81) .150	(67.31) 2.650			
58	(3.81) .150	(78.74) 3.100	(71.12) 2.800	(3.81) .150	(69.85) 2.750			
60	(3.81) .150	(81.28) 3.200	(73.66) 2.900	(3.81) .150	(72.39) 2.850			
62	(3.81) .150	(83.82) 3.300	(76.20) 3.000	(3.81) .150	(74.93) 2.950			
64	(3.81) .150	(86.36) 3.400	(78.74) 3.100	(3.81) .150	(77.47) 3.050			
66	(3.81) .150	(88.90) 3.500	(81.28) 3.200	(3.81) .150	(80.01) 3.150			
68	(3.81) .150	(91.44) 3.600	(83.82) 3.300	(3.81) .150	(82.55) 3.250			
70	(3.81) .150	(93.98) 3.700	(86.36) 3.400	(3.81) .150	(85.09) 3.350			
72	(3.81) .150	(96.52) 3.800	(88.90) 3.500	(3.81) .150	(87.63) 3.450			

NOTES:

1- 20 CIRCUIT SIZE SHOWN FOR ILLUSTRATION PURPOSES.
2- PIN PUSHOUT FORCE: (17.79 N)/4 LBS.
3- PINS MUST MEET SOLDERABILITY SPEC. MIL-STD-202 METHOD 208B.
4- FOR CHARTED DIMENSIONS AND ASSEMBLY NO.S NOT SHOWN ON THIS SHEET - SEE SHEET 4.
5- ROW TO ROW PIN HEIGHT VARIATION MUST NOT EXCEED (0.13)/.005 IN.
6- WINDOW NOT AVAILABLE ON 6 AND 8 CIRCUIT SIZE.
7- PRODUCT CONFORM TO PS-8723.

MATERIAL:

SHROUDED WAFER: 30% G.F. POLYESTER, 94V-0; COLOR: BLACK.
PINS: PHOS. BRONZE 510,
SEE SHEET 4 FOR FINISHES.

ASSEMBLY STYLES "C" AND "D"

MFG.	SH.	REV.	LTR.	REVISIONS
R2				SEE SHEET 1
R				SEE SHEET 1
P				SEE SHEET 1
O				SEE SHEET 1
N				SEE SHEET 1

▽ = 0 ▼ = 0 REVISE ONLY ON CAD SYSTEM

DIMENSIONS SHOWN (METRIC) INCH
UNLESS OTHERWISE SPECIFIED TOLERANCES: ANGULAR ± 0°2'

	INCH	METRIC
3 PLACE	± .005	---
2 PLACE	± .01	± 0.13
1 PLACE	---	± 0.25

DRAFT WHERE APPLICABLE MUST REMAIN WITHIN DIMENSIONS

DRWN. BY RB CHK'D. BY
APPD. BY SCALE 4 : 1

TITLE
SALES ASSEMBLY
WAFER-STRAIGHT MT. FULLY SHROUDED
.100 GRID-FOR USE W/.025 SQ. PINS
WITH .150 END WALLS

MOLEX INCORPORATED
LISLE, ILL. 60532 U.S.A.

SHEET NO. 3 DATE 92/07/17

PART NO. SEE CHART
DRWG. NO. SDA-8723-••••••
FILE NAME 58723X1

THIS DRAWING CONTAINS INFORMATION THAT IS PROPRIETARY TO MOLEX INC. AND SHALL NOT BE USED WITHOUT WRITTEN PERMISSION

DEV. DA SIZE D

ENGINEERING PART NUMBER A-8723-	RELEASE FOR MANUFACTURE			P REF.	PLATING TYPE	CONNECTOR END PLATING TYPE	J LENGTH	K MEAS.	P.C. BOARD END PLATING TYPE	L LENGTH	M MEAS.	PACKAGING INFORMATION PK-70873-	
06C164 / 72C164	RFM			(3.30) .130	TIN	TIN	———	(2.54) .100	TIN	———	(1.27) .050	0018	
06D164 / 72D164	RFM			(5.08) .200	TIN	TIN	———	(2.54) .100	TIN	———	(1.27) .050	0018	
06C571 / 72C571	RFM			(3.30) .130	15 GOLD	GOLD	(5.08) .200	(2.54) .100	TIN	(2.54) .100	(1.27) .050	0018	
06D571 / 72D571	RFM			(5.08) .200	15 GOLD	GOLD	(5.08) .200	(2.54) .100	TIN	(2.54) .100	(1.27) .050	0018	
06C574 / 72C574	RFM			(3.30) .130	30 GOLD	GOLD	(5.08) .200	(2.54) .100	TIN	(2.54) .100	(1.27) .050	0018	
06D574 / 72D574	RFM			(5.08) .200	30 GOLD	GOLD	(5.08) .200	(2.54) .100	TIN	(2.54) .100	(1.27) .050	0018	
06C596 / 72C596				(3.30) .130	50 GOLD	GOLD	(5.08) .200	(2.54) .100	TIN	(2.54) .100	(1.27) .050	0018	
06D596 / 72D596				(5.08) .200	50 GOLD	GOLD	(5.08) .200	(2.54) .100	TIN	(2.54) .100	(1.27) .050	0018	
06G164 / 72G164	RFM			(3.30) .130	TIN	TIN	———	(2.54) .100	TIN	———	(1.27) .050	0021	
06H574 / 72H574	RFM			(3.30) .130	30 GOLD	GOLD	(5.08) .200	(2.54) .100	TIN	(2.54) .100	(1.27) .050	0021	

8723

PLATING:

TIN .000150 MINIMUM TIN OVER .000050 MINIMUM NICKEL PLATE.

15 GOLD .000015 MINIMUM GOLD PLATE IN SELECTED AREA AND .000075 MINIMUM TIN IN SELECTED AREA OVER .000050 MINIMUM NICKEL OVER-ALL.

30 GOLD .000030 MINIMUM GOLD PLATE IN SELECTED AREA AND .000075 MINIMUM TIN IN SELECTED AREA OVER .000050 MINIMUM NICKEL OVER-ALL.

50 GOLD .000050 MINIMUM GOLD PLATE IN SELECTED AREA AND .000075 MINIMUM TIN IN SELECTED AREA OVER .000050 MINIMUM NICKEL OVER-ALL.

•THE PRIMARY SHIPPING CARTON WILL BE LABELED "COMPLIANT TO RoHS DIRECTIVE 2002/95/EC AND ELV ANNEX II OF DIRECTIVE 2000/53/EC". CARTONS WITHOUT THIS LABEL MAY CONTAIN PRODUCT WITH LEAD.

NO. OF CKTS	TIN		TIN		15 GOLD		15 GOLD		30 GOLD		30 GOLD		50 GOLD		50 GOLD		TIN		30 GOLD	
	EDP NUMBER	ENG NUMBER	EDP NUMBER	ENG NUMBER	EDP NUMBER	ENG NUMBER	EDP NUMBER	ENG NUMBER	EDP NUMBER	ENG NUMBER	EDP NUMBER	ENG NUMBER	EDP NUMBER	ENG NUMBER	EDP NUMBER	ENG NUMBER	EDP NUMBER	ENG NUMBER	EDP NUMBER	ENG NUMBER
06	15-42-6206	A-8723-06C164	15-42-6306	A-8723-06D164	15-29-6206	A-8723-06C571	15-29-6306	A-8723-06D571	15-41-7206	A-8723-06C574	15-41-7306	A-8723-06D574		A-8723-06C596		A-8723-06D596	15-42-6606	A-8723-06G164	15-42-6706	A-8723-06H574
08	15-42-6208	A-8723-08C164	15-42-6308	A-8723-08D164	15-29-6208	A-8723-08C571	15-29-6308	A-8723-08D571	15-41-7208	A-8723-08C574	15-41-7308	A-8723-08D574		A-8723-08C596		A-8723-08D596	15-42-6608	A-8723-08G164	15-42-6708	A-8723-08H574
10	15-42-6210	A-8723-10C164	15-42-6310	A-8723-10D164	15-29-6210	A-8723-10C571	15-29-6310	A-8723-10D571	15-41-7210	A-8723-10C574	15-41-7310	A-8723-10D574		A-8723-10C596		A-8723-10D596	15-42-6610	A-8723-10G164	15-42-6710	A-8723-10H574
12	15-42-6212	A-8723-12C164	15-42-6312	A-8723-12D164	15-29-6212	A-8723-12C571	15-29-6312	A-8723-12D571	15-41-7212	A-8723-12C574	15-41-7312	A-8723-12D574		A-8723-12C596		A-8723-12D596	15-42-6612	A-8723-12G164	15-42-6712	A-8723-12H574
14	15-42-6214	A-8723-14C164	15-42-6314	A-8723-14D164	15-29-6214	A-8723-14C571	15-29-6314	A-8723-14D571	15-41-7214	A-8723-14C574	15-41-7314	A-8723-14D574		A-8723-14C596		A-8723-14D596	15-42-6614	A-8723-14G164	15-42-6714	A-8723-14H574
16	15-42-6216	A-8723-16C164	15-42-6316	A-8723-16D164	15-29-6216	A-8723-16C571	15-29-6316	A-8723-16D571	15-41-7216	A-8723-16C574	15-41-7316	A-8723-16D574		A-8723-16C596		A-8723-16D596	15-42-6616	A-8723-16G164	15-42-6716	A-8723-16H574
18	15-42-6218	A-8723-18C164	15-42-6318	A-8723-18D164	15-29-6218	A-8723-18C571	15-29-6318	A-8723-18D571	15-41-7218	A-8723-18C574	15-41-7318	A-8723-18D574		A-8723-18C596		A-8723-18D596	15-42-6618	A-8723-18G164	15-42-6718	A-8723-18H574
20	15-42-6220	A-8723-20C164	15-42-6320	A-8723-20D164	15-29-6220	A-8723-20C571	15-29-6320	A-8723-20D571	15-41-7220	A-8723-20C574	15-41-7320	A-8723-20D574		A-8723-20C596		A-8723-20D596	15-42-6620	A-8723-20G164	15-42-6720	A-8723-20H574
22	15-42-6222	A-8723-22C164	15-42-6322	A-8723-22D164	15-29-6222	A-8723-22C571	15-29-6322	A-8723-22D571	15-41-7222	A-8723-22C574	15-41-7322	A-8723-22D574		A-8723-22C596		A-8723-22D596	15-42-6622	A-8723-22G164	15-42-6722	A-8723-22H574
24	15-42-6224	A-8723-24C164	15-42-6324	A-8723-24D164	15-29-6224	A-8723-24C571	15-29-6324	A-8723-24D571	15-41-7224	A-8723-24C574	15-41-7324	A-8723-24D574		A-8723-24C596		A-8723-24D596	15-42-6624	A-8723-24G164	15-42-6724	A-8723-24H574
26	15-42-6226	A-8723-26C164	15-42-6326	A-8723-26D164	15-29-6226	A-8723-26C571	15-29-6326	A-8723-26D571	15-41-7226	A-8723-26C574	15-41-7326	A-8723-26D574		A-8723-26C596		A-8723-26D596	15-42-6626	A-8723-26G164	15-42-6726	A-8723-26H574
28	15-42-6228	A-8723-28C164	15-42-6328	A-8723-28D164	15-29-6228	A-8723-28C571	15-29-6328	A-8723-28D571	15-41-7228	A-8723-28C574	15-41-7328	A-8723-28D574		A-8723-28C596		A-8723-28D596	15-42-6628	A-8723-28G164	15-42-6728	A-8723-28H574
30	15-42-6230	A-8723-30C164	15-42-6330	A-8723-30D164	15-29-6230	A-8723-30C571	15-29-6330	A-8723-30D571	15-41-7230	A-8723-30C574	15-41-7330	A-8723-30D574		A-8723-30C596		A-8723-30D596	15-42-6630	A-8723-30G164	15-42-6730	A-8723-30H574
32	15-42-6232	A-8723-32C164	15-42-6332	A-8723-32D164	15-29-6232	A-8723-32C571	15-29-6332	A-8723-32D571	15-41-7232	A-8723-32C574	15-41-7332	A-8723-32D574		A-8723-32C596		A-8723-32D596	15-42-6632	A-8723-32G164	15-42-6732	A-8723-32H574
34	15-42-6234	A-8723-34C164	15-42-6334	A-8723-34D164	15-29-6234	A-8723-34C571	15-29-6334	A-8723-34D571	15-41-7234	A-8723-34C574	15-41-7334	A-8723-34D574		A-8723-34C596		A-8723-34D596	15-42-6634	A-8723-34G164	15-42-6734	A-8723-34H574
36	15-42-6236	A-8723-36C164	15-42-6336	A-8723-36D164	15-29-6236	A-8723-36C571	15-29-6336	A-8723-36D571	15-41-7236	A-8723-36C574	15-41-7336	A-8723-36D574		A-8723-36C596		A-8723-36D596	15-42-6636	A-8723-36G164	15-42-6736	A-8723-36H574
38	15-42-6238	A-8723-38C164	15-42-6338	A-8723-38D164	15-29-6238	A-8723-38C571	15-29-6338	A-8723-38D571	15-41-7238	A-8723-38C574	15-41-7338	A-8723-38D574		A-8723-38C596		A-8723-38D596	15-42-6638	A-8723-38G164	15-42-6738	A-8723-38H574
40	15-42-6240	A-8723-40C164	15-42-6340	A-8723-40D164	15-29-6240	A-8723-40C571	15-29-6340	A-8723-40D571	15-41-7240	A-8723-40C574	15-41-7340	A-8723-40D574		A-8723-40C596		A-8723-40D596	15-42-6640	A-8723-40G164	15-42-6740	A-8723-40H574
42	15-42-6242	A-8723-42C164	15-42-6342	A-8723-42D164	15-29-6242	A-8723-42C571	15-29-6342	A-8723-42D571	15-41-7242	A-8723-42C574	15-41-7342	A-8723-42D574		A-8723-42C596		A-8723-42D596	15-42-6642	A-8723-42G164	15-42-6742	A-8723-42H574
44	15-42-6244	A-8723-44C164	15-42-6344	A-8723-44D164	15-29-6244	A-8723-44C571	15-29-6344	A-8723-44D571	15-41-7244	A-8723-44C574	15-41-7344	A-8723-44D574		A-8723-44C596		A-8723-44D596	15-42-6644	A-8723-44G164	15-42-6744	A-8723-44H574
46	15-42-6246	A-8723-46C164	15-42-6346	A-8723-46D164	15-29-6246	A-8723-46C571	15-29-6346	A-8723-46D571	15-41-7246	A-8723-46C574	15-41-7346	A-8723-46D574		A-8723-46C596		A-8723-46D596	15-42-6646	A-8723-46G164	15-42-6746	A-8723-46H574
48	15-42-6248	A-8723-48C164	15-42-6348	A-8723-48D164	15-29-6248	A-8723-48C571	15-29-6348	A-8723-48D571	15-41-7248	A-8723-48C574	15-41-7348	A-8723-48D574		A-8723-48C596		A-8723-48D596	15-42-6648	A-8723-48G164	15-42-6748	A-8723-48H574
50	15-42-6250	A-8723-50C164	15-42-6350	A-8723-50D164	15-29-6250	A-8723-50C571	15-29-6350	A-8723-50D571	15-41-7250	A-8723-50C574	15-41-7350	A-8723-50D574		A-8723-50C596		A-8723-50D596	15-42-6650	A-8723-50G164	15-42-6750	A-8723-50H574
52	15-42-6252	A-8723-52C164	15-42-6352	A-8723-52D164	15-29-6252	A-8723-52C571	15-29-6352	A-8723-52D571	15-41-7252	A-8723-52C574	15-41-7352	A-8723-52D574		A-8723-52C596		A-8723-52D596	15-42-6652	A-8723-52G164	15-42-6752	A-8723-52H574
54	15-42-6254	A-8723-54C164	15-42-6354	A-8723-54D164	15-29-6254	A-8723-54C571	15-29-6354	A-8723-54D571	15-41-7254	A-8723-54C574	15-41-7354	A-8723-54D574		A-8723-54C596		A-8723-54D596	15-42-6654	A-8723-54G164	15-42-6754	A-8723-54H574
56	15-42-6256	A-8723-56C164	15-42-6356	A-8723-56D164	15-29-6256	A-8723-56C571	15-29-6356	A-8723-56D571	15-41-7256	A-8723-56C574	15-41-7356	A-8723-56D574		A-8723-56C596		A-8723-56D596	15-42-6656	A-8723-56G164	15-42-6756	A-8723-56H574
58	15-42-6258	A-8723-58C164	15-42-6358	A-8723-58D164	15-29-6258	A-8723-58C571	15-29-6358	A-8723-58D571	15-41-7258	A-8723-58C574	15-41-7358	A-8723-58D574		A-8723-58C596		A-8723-58D596	15-42-6658	A-8723-58G164	15-42-6758	A-8723-58H574
60	15-42-6260	A-8723-60C164	15-42-6360	A-8723-60D164	15-29-6260	A-8723-60C571	15-29-6360	A-8723-60D571	15-41-7260	A-8723-60C574	15-41-7360	A-8723-60D574		A-8723-60C596		A-8723-60D596	15-42-6660	A-8723-60G164	15-42-6760	A-8723-60H574
62	15-42-6262	A-8723-62C164	15-42-6362	A-8723-62D164	15-29-6262	A-8723-62C571	15-29-6362	A-8723-62D571	15-41-7262	A-8723-62C574	15-41-7362	A-8723-62D574		A-8723-62C596		A-8723-62D596	15-42-6662	A-8723-62G164	15-42-6762	A-8723-62H574
64	15-42-6264	A-8723-64C164	15-42-6364	A-8723-64D164	15-29-6264	A-8723-64C571	15-29-6364	A-8723-64D571	15-41-7264	A-8723-64C574	15-41-7364	A-8723-64D574		A-8723-64C596		A-8723-64D596	15-42-6664	A-8723-64G164	15-42-6764	A-8723-64H574
66	15-42-6266	A-8723-66C164	15-42-6366	A-8723-66D164	15-29-6266	A-8723-66C571	15-29-6366	A-8723-66D571	15-41-7266	A-8723-66C574	15-41-7366	A-8723-66D574		A-8723-66C596		A-8723-66D596	15-42-6666	A-8723-66G164	15-42-6766	A-8723-66H574
68	15-42-6268	A-8723-68C164	15-42-6368	A-8723-68D164	15-29-6268	A-8723-68C571	15-29-6368	A-8723-68D571	15-41-7268	A-8723-68C574	15-41-7368	A-8723-68D574		A-8723-68C596		A-8723-68D596	15-42-6668	A-8723-68G164	15-42-6768	A-8723-68H574
70	15-42-6270	A-8723-70C164	15-42-6370	A-8723-70D164	15-29-6270	A-8723-70C571	15-29-6370	A-8723-70D571	15-41-7270	A-8723-70C574	15-41-7370	A-8723-70D574		A-8723-70C596		A-8723-70D596	15-42-6670	A-8723-70G164	15-42-6770	A-8723-70H574
72	15-42-6272	A-8723-72C164	15-42-6372	A-8723-72D164	15-29-6272	A-8723-72C571	15-29-6372	A-8723-72D571	15-41-7272	A-8723-72C574	15-41-7372	A-8723-72D574		A-8723-72C596		A-8723-72D596	15-42-6672	A-8723-72G164	15-42-6772	A-8723-72H574

LTR.	REVISIONS	LTR.	REVISIONS
		T	SEE SHEET 1
		O	SEE SHEET 1
		N	SEE SHEET 1

DIMENSIONS SHOWN (METRIC) INCH

UNLESS OTHERWISE SPECIFIED TOLERANCES: ANGULAR ± 1/2°

	INCH	METRIC
3 PLACE	±	
2 PLACE	±	±
1 PLACE		±

DRAFT WHERE APPLICABLE MUST REMAIN WITHIN DIMENSIONS

DRWN. BY RB | CHK'D. BY | APP'D. BY | SCALE :

▽ = 0 ▼ = 0 REVISE ONLY ON CAD SYSTEM

TITLE SALES ASSEMBLY
WAFER-STRAIGHT MT. FULLY SHROUDED .100 GRID-FOR USE W/.025 SQ. PINS WITH .150 END WALLS

MOLEX INCORPORATED LISLE, ILL. 60532 U.S.A.

SHEET NO. 4 | DATE 92/07/17

PART NO. SEE CHART | DRWG. NO. SDA-8723-••••••

FILE NAME 58723SX2

THIS DRAWING CONTAINS INFORMATION THAT IS PROPRIETARY TO MOLEX INC. AND SHOULD NOT BE USED WITHOUT WRITTEN PERMISSION.

DIV. DA | SIZE D