Alle Rechte vorbehalten/ *All rights reserved*

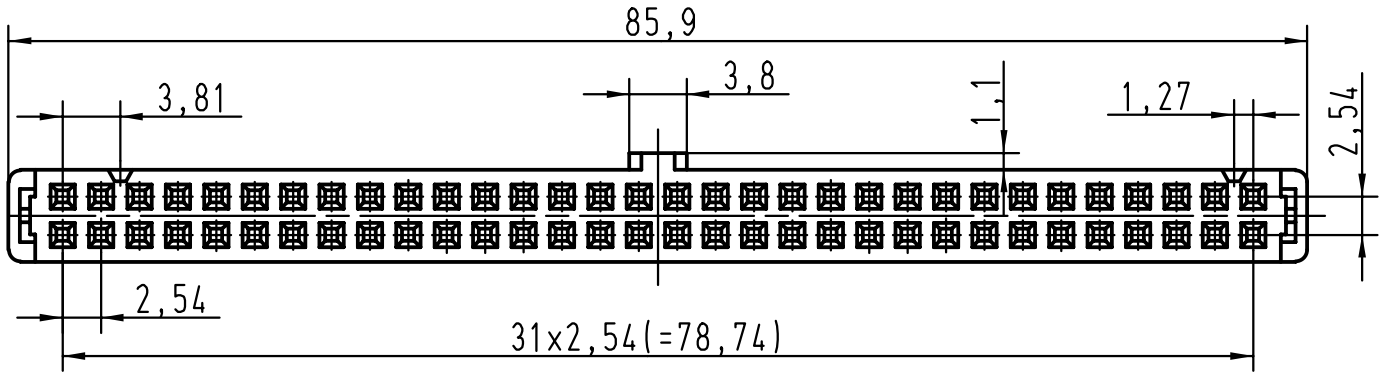

1:1

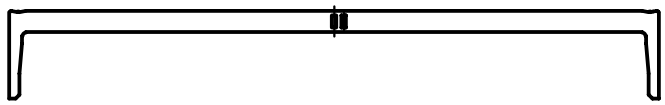

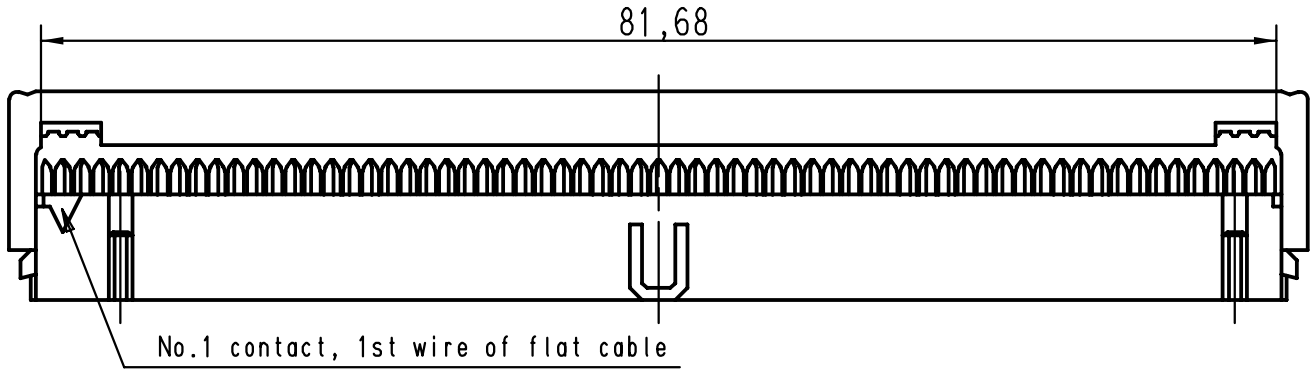

pre assembled

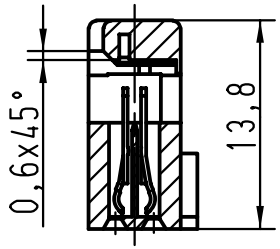

fitted

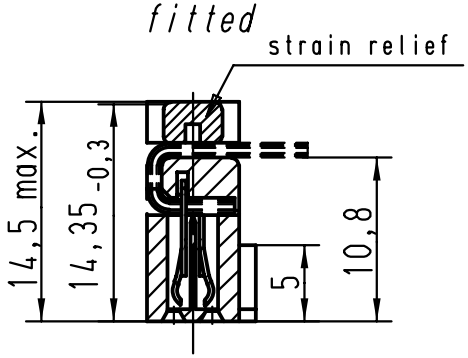

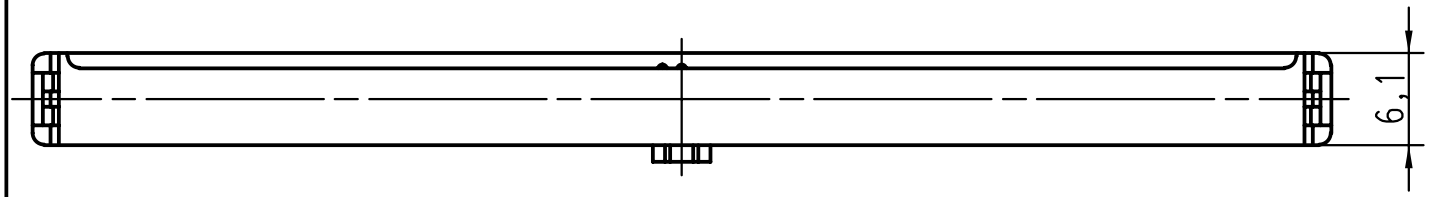

Part-No.	performence level		Mod.	Dat.	Name
09185645814	0,76 µm Au				
09185646814	2				
09185647814	3		29757	25-MAR-02	CV

	Dat.	Name
Detail.	25-MAR-02	CV
Insp.		
Stand.		

All Dim. in mm
Orig. Size DIN A 4

HARTING EURL
F-95972 Paris

SEK 18 Female connector
64 poles with central polarisation, closed end cover and strain relief

TB 0918564X814

Sub.

Maßstab/ *Scale* 2:1 1:1

Blatt/ *Page* 1