THIS COPY IS PROVIDED ON A RESTRICTED BASIS AND IS NOT TO BE USED IN ANY WAY DETRIMENTAL TO THE INTERESTS OF PANDUIT CORP.

D

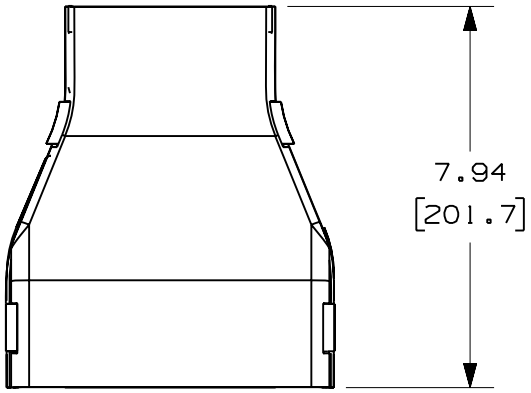

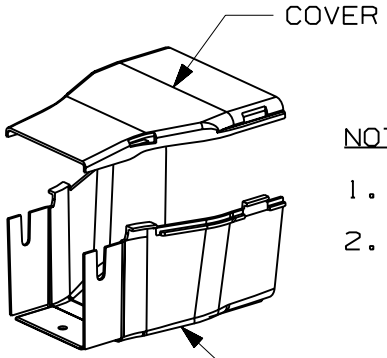

PANDUIT PART NUMBER	WEIGHT
FRRF64	0.75 LB/EACH (342g/EACH)

G

NOTES:

1. SEE CURRENT CATALOG FOR ADDITIONAL PART SUFFIXES TO INDICATE COLOR AND/OR PACKAGE QUANTITY.
2. DIMENSIONS IN PARENTHESES ARE IN METRIC.

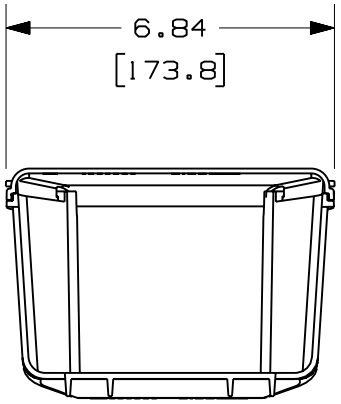

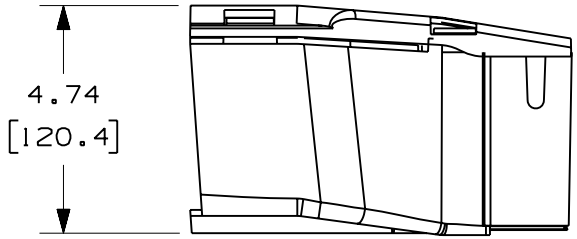

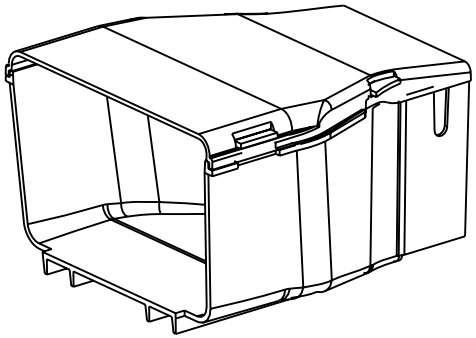

ENG. REF.: D37185EX_DC_FRRF64_01.prt

CAD FILENAME/LAYERS

F FRRF64.pdf

PANDUIT CORP TINLEY PARK, ILLINOIS

FIBERRUNNER 6x4 TO FIBER-DUCT 4x4 REDUCER (FRRF64)

E CUSTOMER DRAWING

UNLESS OTHERWISE SPECIFIED, DIMENSIONAL TOLERANCES ARE:
(.X) ± (.XXX) ±
(.XX) ±.03 (.8) ANGLES ±

UNLESS OTHERWISE SPECIFIED, ALL DIMENSIONS ARE GIVEN IN INCHES, THIRD ANGLE PROJECTION.

REV	DATE	BY	CHK	DESCRIPTION	ECN	-	R	CUST	SUP	GMBH
-	--------	---	---	G. REVISED PART WEIGHT F. REVISED CAD FILENAME	--------		--	--		
2	7-13-06	DTP	RN	E. REVISED DRAWING TITLE D. REVISED AND REDRAWN	37185-70		RN	RN		

DRAWN BY REWE
DATE 5-4-00
CHK'D JCHE
MAT'L: ABS
SCALE NONE
DRAWING NO. 37185-70
DWG A
SIZE