used for: D-SUB HD FILTER

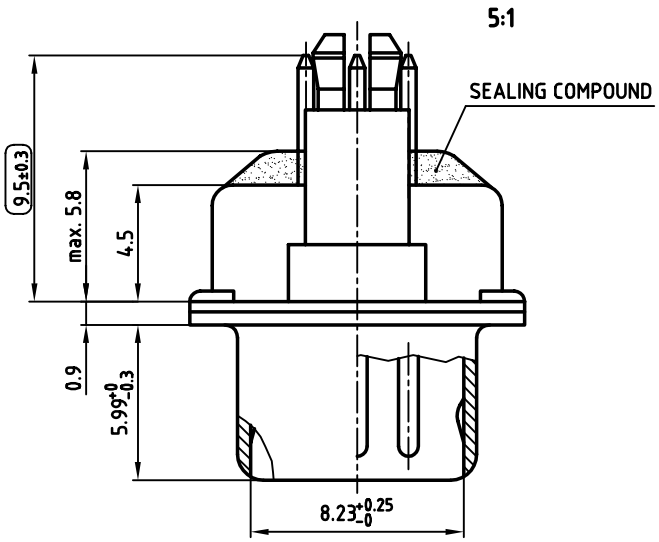

NOTES:

1. METALSHELLS: STEEL; min. 320µ" TIN
2. INSULATORS: PBT GF UL 94 V-0, BLACK
3. CONTACTS: COPPER ALLOY
   PLATING: 8µ" HARD GOLD OVER min. 50µ" NICKEL
4. THREADED SPACER CLIP: COPPER ALLOY; min. 200µ" TIN over 80µ" NICKEL
   PCB-HOLE: Ø3.1±0.1; PCB THICKNESS 1.6mm
5. COLLAR: COPPER ALLOY; min. 200µ" TIN over 80µ" NICKEL
6. P.C.B. HOLE DRILLINGS ON DRAWING NO.: 16V1IH6B
7. CAPACITANCE: SEE TABLE
8. DIELECTRIC WITHSTANDING VOLTAGE: 300V DC
9. MAXIMUM TORQUE VALUE FOR THREAD: 6" LBS
10. CONNECTOR IS PART MARKED: PART-NO. CONEC Y/WW
11. ( ) = CHECK DIMENSION

CAPACITANCE	PART NO.
180pF ±20%	**241A27820X**
370pF ±20%	**241A20780X**
830pF ±20%	**241A20820X**

APPROVAL # FREIGABE # DEBLOCAGE # AUTOR/ZACION # APPROVAL

CUSTOMER APPROVAL DATE:

NAME: TITLE:

COMPANY NAME:

APPROVAL # FREIGABE # DEBLOCAGE # AUTOR/ZACION # APPROVAL

THIS DRAWING MAY NOT BE COPIED OR REPRODUCED IN ANY WAY, AND MAY NOT BE PASSED ON TO A THIRD PARTY WITHOUT WRITTEN PERMISSION. OWNERSHIP AND COPYRIGHT OF CONEC GmbH

DO NOT ALTER CAD DRAWING BY HAND

rev.	description	date	name

tolerance

dim. in mm

2003	date	name
drawn	23.09.	Lehmenkühler
appd.	24.09.	Mickenbecker
norm	DIN 41652	
d-old		

CONEC®

scale: 2:1 (5:1)

material: SEE NOTES

title:

D-SUB HD FILTER MALE

44pos. SOLDER PIN STRAIGHT
with threaded spacer clip

dwg no: 24K1A463

AutoCAD 2000 | DIN-A 3 | sh: 1/1

part no: SEE TABLE