# DIMENSIONS mm (inches)

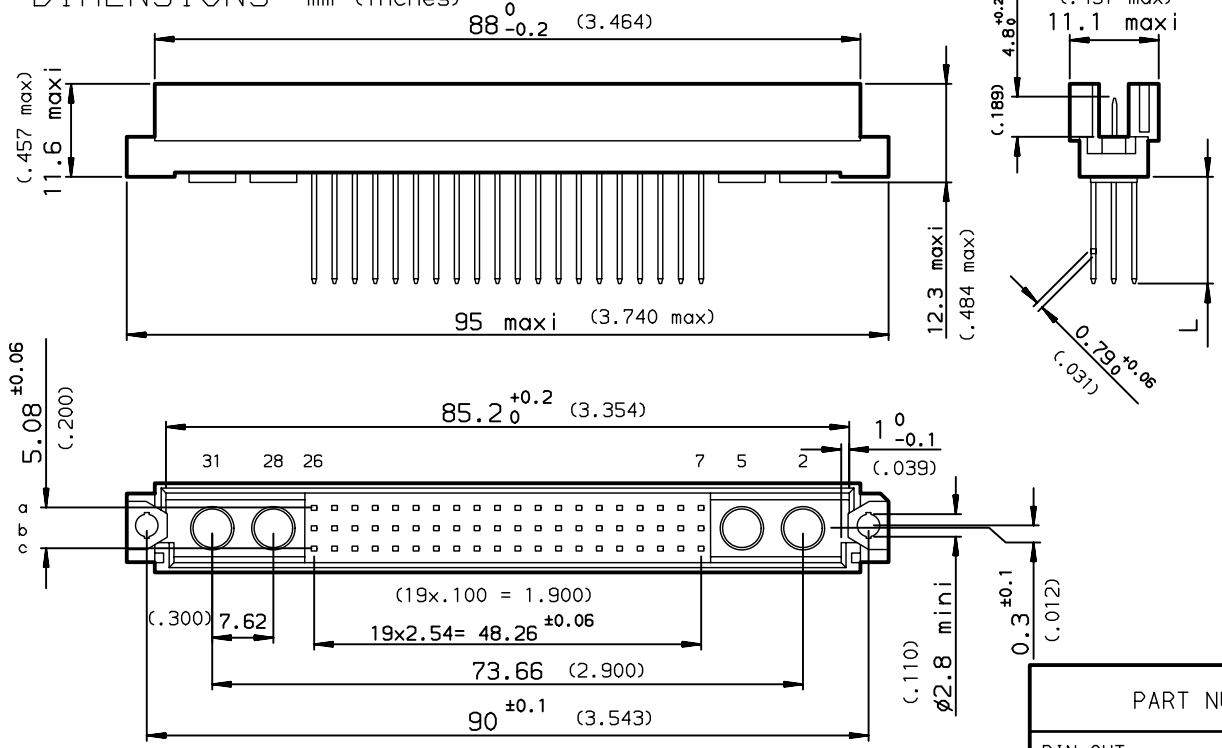


GENERAL CHARACTERISTICS AND ROHS INFORMATIONS:
SEE DRAWING C-8609-0000B

| PART NUMBER | 8609 | □ | □ | C8 | □ | 7 | □ | 5 | □ |
|---|---|---|---|---|---|---|---|---|---|

PIN OUT
rows a-b-c — 3 — 60
rows a-c — 4 — 40

NUMBER OF CONTACTS

TERMINATION
L = 13.3 ±0.25 (.523) — WW — 15
L = 17.95 ±0.25(.706) — WW — 25

PERFORMANCE CLASS
DIN 41612 class 3 — 4
DIN 41612 class 2 — 5
DIN 41612 class 1 — 6

TERMINATION TYPE
TIN LEAD — 000E1
LEAD FREE — E1LF

European Views

## PCB DRILLING

component side

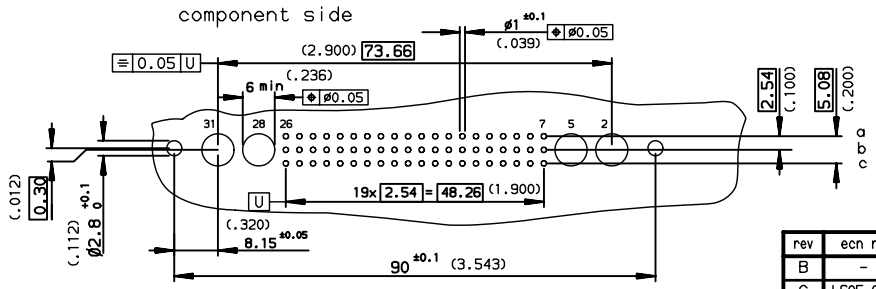


| rev | ecn no | dr | date |
|---|---|---|---|
| B | - | | 1996/02/22 |
| C | LS05-008 | JTA | 2005/03/17 |
| D | LS06-0095 | LGO | 2006/06/16 |
| - | - | - | - |
| - | - | - | - |
| - | - | - | - |
| - | - | - | - |

www.fciconnect.com

| | | |
|---|---|---|
| Dr | ROUILLARD | 1992/09/21 |
| Eng | TARON | 1992/09/21 |
| Chr | LEGARE | 1992/09/21 |
| Appr | LEGARE | 1992/09/21 |

surface ISO 1302 — tolerance std ISO 406 ISO 1101
TOLERANCES UNLESS OTHERWISE SPECIFIED

| ANGULAR | | LINEAR | | |
|---|---|---|---|---|
| | | 0.X | ±0.1 | |
| | | 0.XX | ±0.1 | |
| 0.XX° | ±2° | 0.XXX | ±0.1 | |

Product family DIN 8609

projection — mm
size A3 — Scale 1.5
ECN LS06-0095
Spec ref -

title: STRAIGHT MALE WITH SPECIAL CONTACTS
WIRE WRAP

dwg no C-8609-0320 — Rev. D

catalog no -

CUSTOMER — sheet 1 of 1

Copyright FCI.

REV F - 2006-04-17