NOTES: 1. MATERIAL:
HOUSING: POLYESTER, G.F. (UL 94V-0), COLOUR - BLACK.
TERMINAL: PHOSPHOR BRONZE.
2. TERMINAL PLATING:
90635-***1: CONTACT AREA: GOLD FLASH (0.1um)/ 4uin MIN.
I.D. AREA: TIN (1um)/ 39uin MIN. OVER
NICKEL (1um)/ 39uin MIN.
90635-***2 :CONTACT AREA: GOLD (0.76um)/ 30uin MIN
I.D. AREA: TIN (1um)/ 39uin MIN. OVER
NICKEL (1um)/ 39uin MIN.
90635-***3 :CONTACT AREA: GOLD (0.38um)/ 15uin MIN
I.D. AREA: TIN (1um)/ 39uin MIN. OVER
NICKEL (1um)/ 39uin MIN.
90635-***4 :CONTACT AREA: GOLD (0.51um)/ 20uin MIN
I.D. AREA: TIN (1um)/ 39uin MIN. OVER
NICKEL (1um)/ 39uin MIN.
20 & 50 CIRCUIT SIZES ONLY .
3. FOR USE WITH No. 26 & 28 AWG STRANDED WIRE (7 CONDUCTORS) AND No. 28 SOLID WIRE 1.14/(.045) DIA. MAX. INSULATION RIBBON CABLE WITH 1.27/(.050) CENTERS.
4. MATING STRAIN RELIEF: MOLEX No. 90170.
5. DIMENSION "E" IS TOTAL HEIGHT AFTER ASSEMBLED WITH CABLE.
E= 10.5/(.413) REF. WITHOUT STRAIN RELIEF.
E= (15.2)/.598 MAX. WITH STRAIN RELIEF No. 90170.
(14.5)/.571 REF. WHEN COMPRESSED .
6. FOR PRODUCT SPECIFICATION, SEE PS 99020-0015.

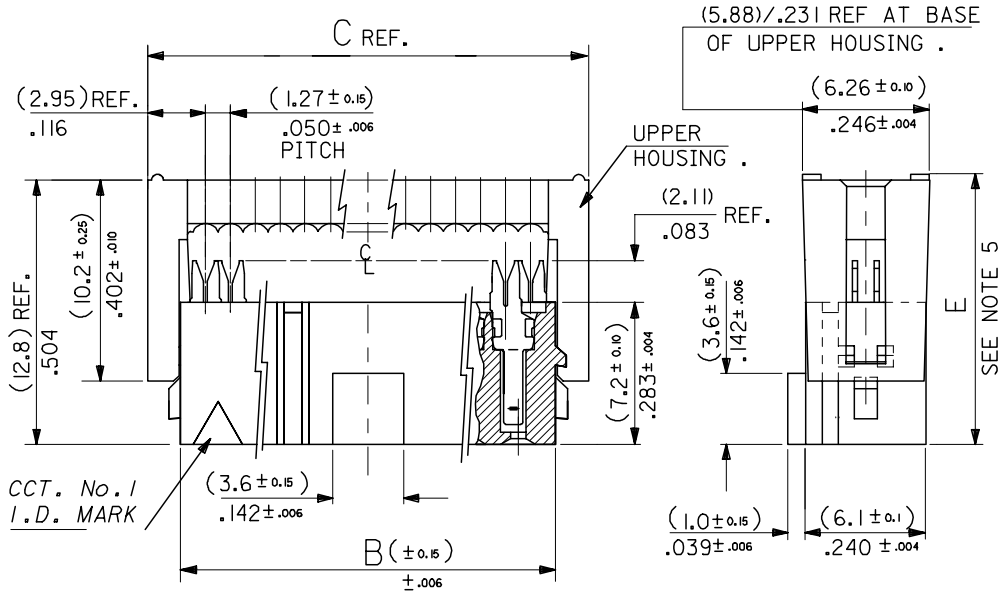

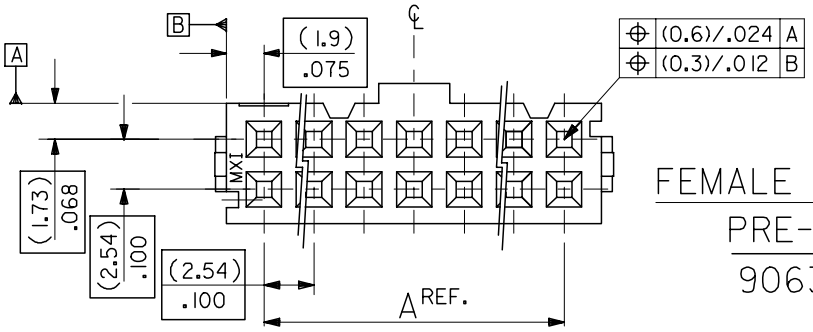

FEMALE ASSEMBLY.
PRE-LOADED.
90635-****
WITH POLARISATION =1 OR 9
CIRCUIT SIZE
PLATING OPTION

NO.OF CKT.	ENG. NO.	A	B	C
64	90635-*64*	(78.74) 3.100	(82.54) 3.250	(85.88) 3.381
60	90635-*60*	(73.66) 2.900	(77.46) 3.050	(80.80) 3.181
50	90635-*50*	(60.96) 2.400	(64.76) 2.55	(68.10) 2.681
40	90635-*40* / 90635-9402 (CUSTOMER SPECIFIC)	(48.26) 1.900	(52.06) 2.050	(55.40) 2.181
34	90635-*34*	(40.64) 1.600	(44.44) 1.750	(47.78) 1.881
30	90635-*30*	(35.56) 1.400	(39.36) 1.550	(42.70) 1.681
26	90635-*26*	(30.48) 1.200	(34.28) 1.350	(37.62) 1.481
24	90635-*24*	(27.94) 1.100	(31.74) 1.250	(35.08) 1.381
20	90635-*20*	(22.86) .900	(26.66) 1.050	(30.00) 1.181
16	90635-*16*	(17.78) .700	(21.58) .850	(24.92) .981
14	90635-*14*	(15.24) .600	(19.04) .750	(22.38) .881
10	90635-*10*	(10.16) .400	(13.96) .550	(17.30) .681

REMOVED OPTION
EC NO: E2007-0495 2006/12/06
DRWN:DBYRNES 2006/12/07
CHKD: 2006/12/07
APPR:EOMAHONY 2006/12/07
DESCRIPTION
REV

QUALITY SYMBOLS
▼=0
▽C=0

GENERAL TOLERANCES (UNLESS SPECIFIED)

	mm	INCH
4 PLACES	± ---	± ---
3 PLACES	± ---	± ---
2 PLACES	± ---	± ---
1 PLACE	± ---	± ---
ANGULAR ±---°		

DRAFT WHERE APPLICABLE MUST REMAIN WITHIN DIMENSIONS

DIMENSION STYLE: MM/IN
SCALE: 4:1
DESIGN UNITS: METRIC
THIRD ANGLE PROJECTION

DRAWN BY: POB	DATE: 1990/09/25	TITLE: QIK FLECS SINGLE BEAM FEMALE ASSEMBLY, PRE-LOADED
CHECKED BY: JDENNEHY	DATE: 2005/08/10	
APPROVED BY: JDENNEHY	DATE: 2005/08/10	molex MOLEX INCORPORATED
MATERIAL NO.: SEE CHART		DOCUMENT NO.: SDA-90635
		SHEET NO.: 2 OF 3

SIZE A3

THIS DRAWING CONTAINS INFORMATION THAT IS PROPRIETARY TO MOLEX INCORPORATED AND SHOULD NOT BE USED WITHOUT WRITTEN PERMISSION

tb_frame_A3_P_ME_T
Rev. D 2004/04/02