THIS DRAWING IS UNPUBLISHED. RELEASED FOR PUBLICATION -,- .
© COPYRIGHT - BY TYCO ELECTRONICS CORPORATION. ALL RIGHTS RESERVED.

LOC	DIST
AD	00

REVISIONS

P	LTR	DESCRIPTION	DATE	DWN	APVD
	G	REVISED PER ECO-11-000045	05JAN11	DH	DY

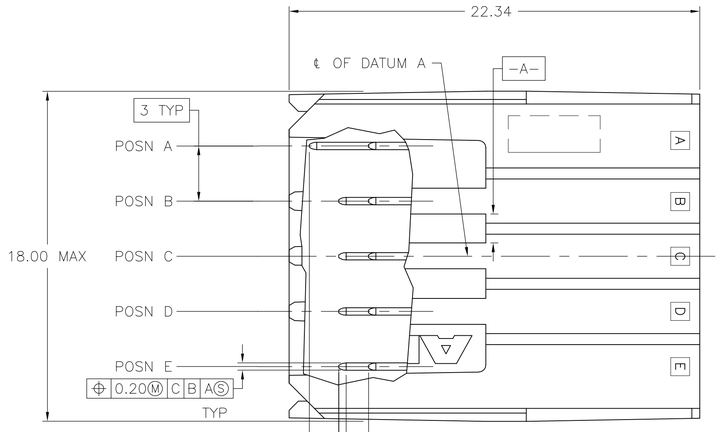

(-3 AS SHOWN)

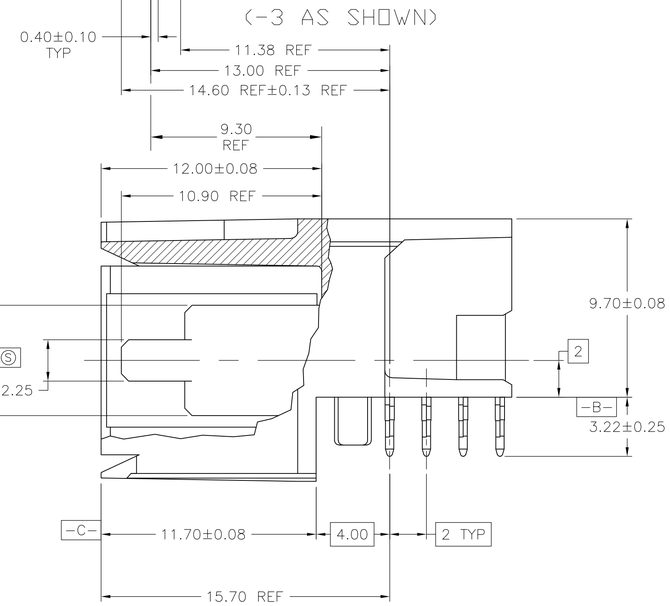

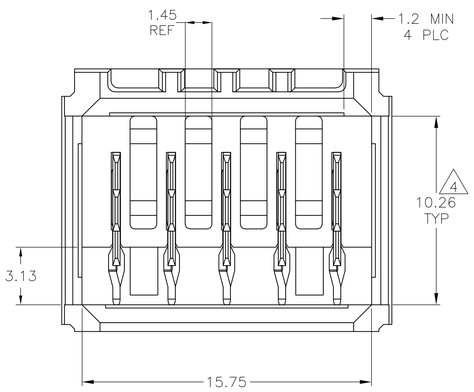

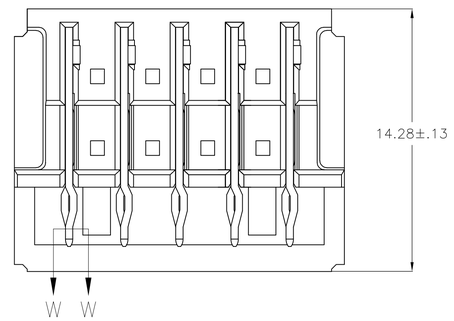

1. MATERIAL: HOUSING: POLYESTER. COLOR: GRAY. UL 94V-O.
   CONTACT: PHOSPHOR BRONZE.
2. FINISH: CONTACT MATING AREA: 1.27μm MIN GOLD OR 0.08μm MIN GOLD OVER 0.76μm MIN PALLADIUM-NICKEL.
   ACTION PIN AREA: 0.5μm MIN TIN LEAD PLATE,
   ALL OVER 1.27μm MIN NICKEL UNDERPLATE.
3. FINISH: CONTACT LUBRICATION WITH BELLCORE APPROVED LUBRICANT. TECHNICAL REFERENCE: GR-1217-CORE, ISSUE 1, NOVEMBER 1995.
4. 10.26±0.13 DIMENSION APPLIES IN THIS AREA.
5. REFERENCE APPLICATION SPEC 114-1103 FOR RECOMMENDED PLATED THRU HOLE DIAMETER AND PLATING THICKNESSES.
6. CURRENT RATING 10A/CONTACT PER PRODUCT SPEC 108-1651.

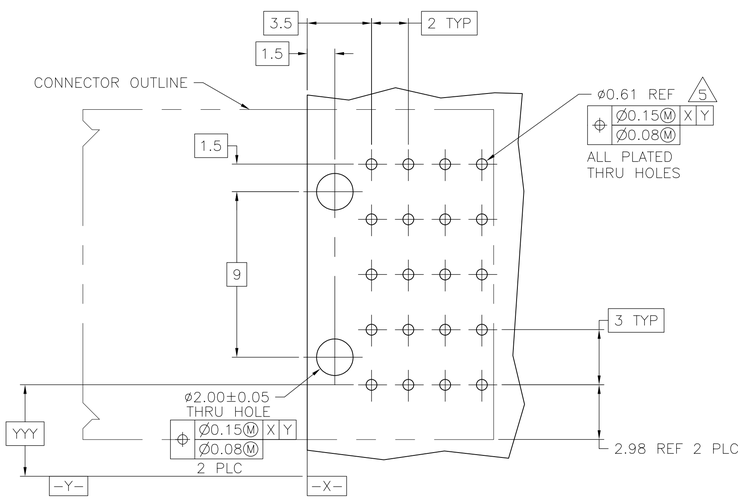

RECOMMENDED PCB HOLE LAYOUT

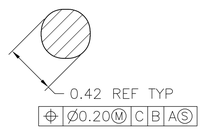

SECTION W-W
SCALE 40:1

A	B-E	5	646955-3
E	A-D	5	646955-2
A-E	-	5	646955-1
POSITIONS LOADED WITH 10.90 REF CONTACTS (2)	POSITIONS LOADED WITH 9.30 REF CONTACTS (3)	NO OF LOADED POSITIONS	PART NUMBER

THIS DRAWING IS A CONTROLLED DOCUMENT.

DIMENSIONS: mm

TOLERANCES, UNLESS OTHERWISE SPECIFIED:
0 PLC ± -
1 PLC ± -
2 PLC ± 0.13
3 PLC ± -
4 PLC ± -
ANGLES ± -

MATERIAL 1
FINISH 2

DWN	B.CARBO	08 OCT 01
CHK	R.PATTERSON	08 OCT 01
APVD	R.PATTERSON	08 OCT 01
PRODUCT SPEC	-	
APPLICATION SPEC	-	
WEIGHT	-	

Tyco Electronics
Tyco Electronics Corporation
Harrisburg, Pa 17105-3608

NAME: ASSEMBLY, RIGHT ANGLE HEADER, W/ RETENTION PEGS, UNIVERSAL POWER MODULE

SIZE	CAGE CODE	DRAWING NO	RESTRICTED TO
A1	00779	C-646955	-

CUSTOMER DRAWING | SCALE 6:1 | SHEET 1 OF 1 | REV G