REV.	DATE	DESCRIPTION
NC	11/12/97	INITIAL RELEASE

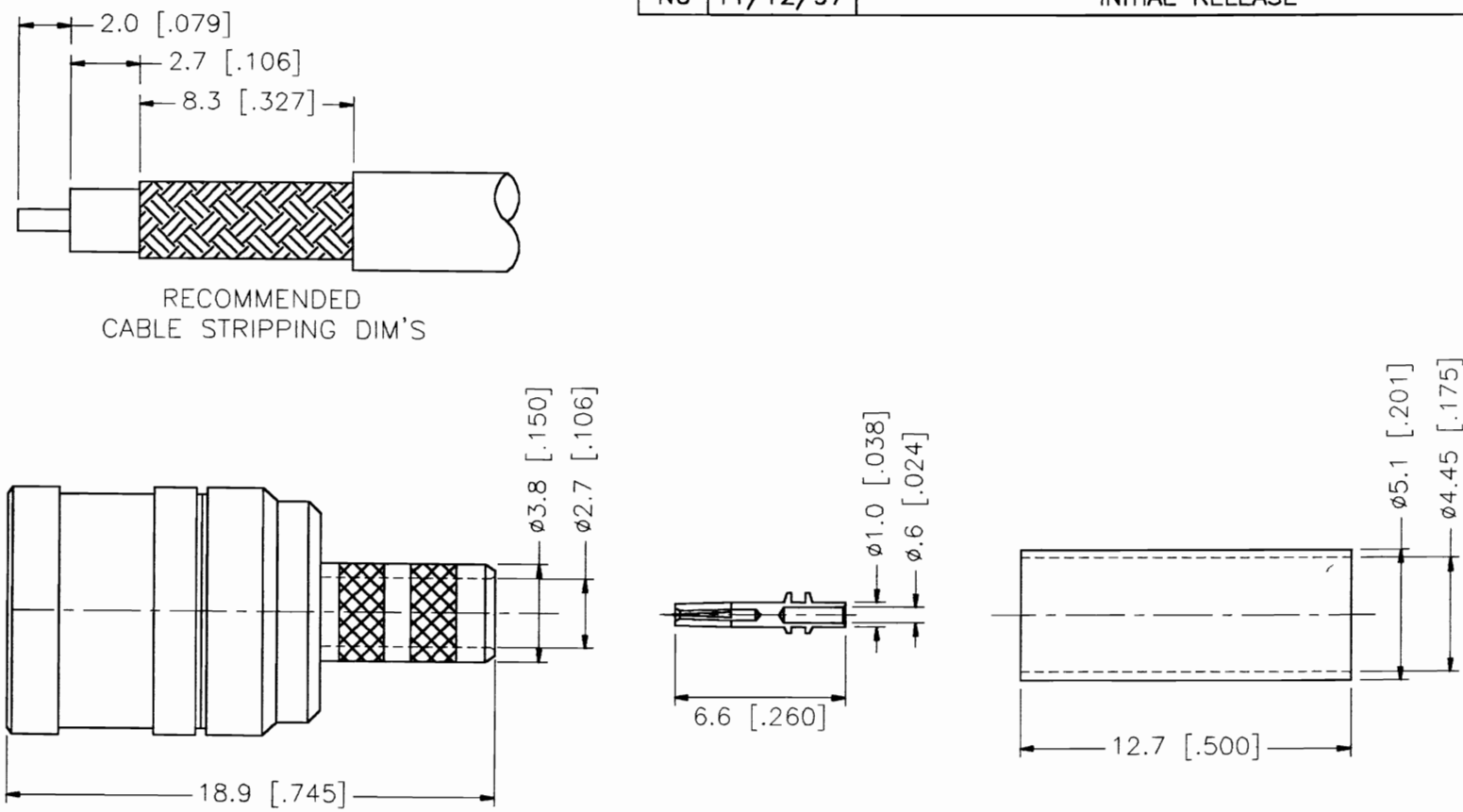

	DESCRIPTION	MATERIAL	FINISH
1	BODY	BRASS	GOLD
2	INSULATOR	TEFLON	NATURAL
3	CONTACT PIN	BER. COPPER	GOLD
4	FERRULE	BRASS	GOLD
5			
6			
7			
8			

UNLESS OTHERWISE SPECIFIED DIMENSIONS ARE IN MILLIMETERS

DIMENSIONS IN [ ] ARE IN INCHES FOR CUSTOMER REFERANCE ONLY

UNLESS OTHERWISE SPECIFIED TOLERANCES FOR MILLIMETERS ARE:

0.5–6 = ± 0.2
6–30 = ± 0.4
30–120 = ± 0.6
120–315 = ± 1
315–1000 = ± 1.6
1000–2000 = ± 2.4

DO NOT SCALE DRAWING

APPROVALS		DATE
DRAWN	G.R.S.	11/12/97
CHECKED		
ISSUED		

Connex
Connector Corporation

TITLE: SMB CRIMP PLUG
BELDEN 8218 – 75 ohms

SIZE	FSCM NO.	DWG. NO.	REV.
A	99001	142208.DWG	NC

SCALE	PART NO.	SHEET
NA	142208	1 OF 1