PART NUMBER	REV	FIRST USED	TERMINATOR	FEED TYPE	DESCRIPTION
1528240-1	B	–	LEADMAKER	MECH POST FEED	CUTS CARRIER
1528240-2	B	–	BENCH	MECH PRE FEED	CUTS CARRIER
1528240-6	B	–	LEADMAKER	MECH POST FEED	CONTINUOUS CARRIER
7-1528240-1	B	–	LEADMAKER	MECH POST FEED	-1 AND SPARE PARTS
7-1528240-2	B	–	BENCH	MECH PRE FEED	-2 AND SPARE PARTS
7-1528240-6	B	–	LEADMAKER	MECH POST FEED	-6 AND SPARE PARTS
7-1528240-7	A	–	–	–	SPARE PARTS KIT

CRIMP DATA AMP TERMINAL AMP CRIMP SPECS

TERMINAL NAME: 025 RECEPTACLE CONTACT

CRIMP	SIZE	TYPE	RANGE
WIRE	1.40 [.055 IN]	F	0.22 - 0.50mm²
INSUL	1.40 [.055 IN]	F	1.10-1.70 [.043-.067 IN]

WIRE STRIP LENGTH 3.00-3.50 [.118-.138 IN]

APPL INSTRUCTION 408-8322 & 408-8490

TERMINAL – – APPL SPEC 114-5250 –

FEED 7.50 [.295 IN]

TERMINALS APPLIED

1123343	–	–	–	–
–	–	–	–	–
–	–	–	–	–
–	–	–	–	–
–	–	–	–	–
–	–	–	–	–
–	–	–	–	–
–	–	–	–	–

WIRE SIZE mm² AWG	CRIMP HEIGHT ✳	REF SETTING ✳
0.50mm²	1.06 ±0.05 [.042 ±.002 IN]	C5
0.30mm²	0.96 ±0.05 [.038 ±.002 IN]	D1
0.22mm²	0.84 ±0.05 [.033 ±.002 IN]	D9
–	–	–
–	–	–
–	–	–
–	–	–
–	–	–
–	–	–
–	–	–
–	–	–
–	–	–
–	–	–
–	–	–
–	–	–

1. RECOMMENDED SPARE PARTS.
2. GREASE RAM, CAM, CAM FOLLOWER AND FEED ROD LIGHTLY.
3. LUBRICATE DAILY PER THE APPLICATOR INSTRUCTION SHEET SUPPLIED WITH THE APPLICATOR.
4. APPLICATION SPECIFICATION 114-5250 HAS AN INSULATION HEIGHT REQUIREMENT.

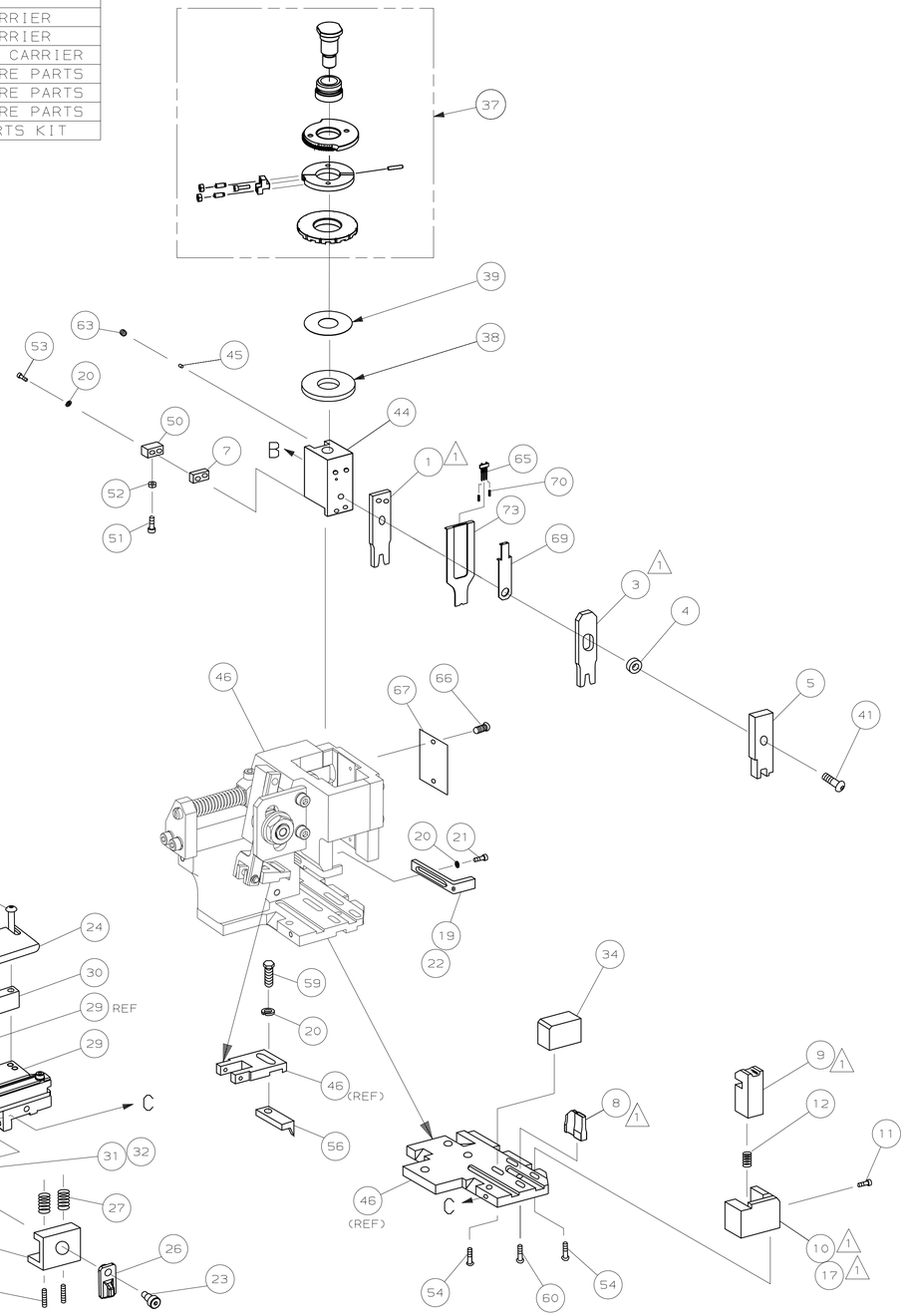

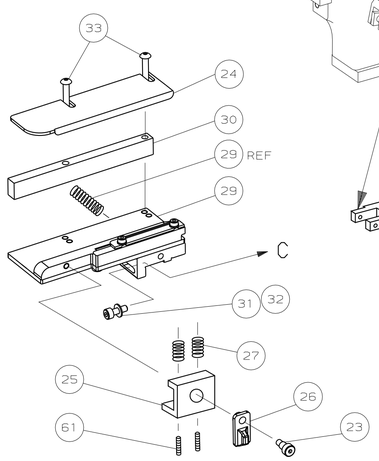

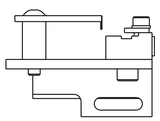

VIEW B ROTATED 180°

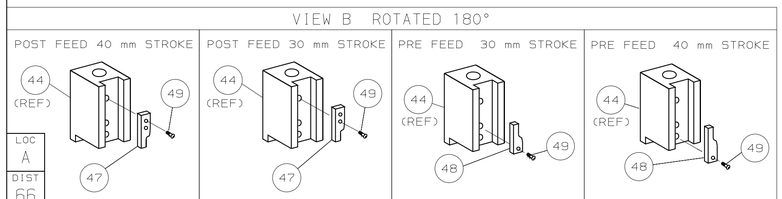

✳ WARNING:

ON INSTALLATION, SET WIRE DISC TO LARGEST WIRE SIZE SETTING. USE OF SETTINGS BELOW MIN REQUIRED CRIMP HEIGHT SETTING WILL CAUSE DAMAGE TO CRIMP TOOLING.

–	1	1	1	1	1	1	1490525-3	DEPRESSOR, WIRE	73
–	1	1	1	1	1	1	1528240	PRINT, APPLICATOR LOG SHEET	72
–	1	1	1	1	1	1	1338705-3	DOCUMENTATION PACKAGE	71
–	2	2	2	2	2	2	23147-7	SPRING, DEPRESSOR	70
–	1	1	1	1	1	1	1490524-1	SPACER, DEPRESSOR	69
									68
–	1	1	1	1	1	1	461264-5	PLATE, IDENTIFICATION	67
–	2	2	2	2	2	2	21017-2	SCR,DRIVE(#2x.19)ID PLATE	66
–	1	1	1	1	1	1	1424350-1	HOLDER, PIN, WIRED	65
									64
–	1	1	1	1	1	1	3-18031-0	SCR,SKT SET(M6X6)RAM	63
									62
–	2	2	2	2	2	2	2-18032-5	SCR,SET(M5X20)DRAG	61
–	1	1	1	1	1	1	18024-7	SCR,BHC(M4X10)ANVIL	60
–	1	1	1	1	1	1	5-18022-2	SCR,HEX(M4X8)FEED FINGER	59
									58
									57
–	1	1	1	1	1	1	1338685-1	PAWL, FEED	56
									55
–	4	4	4	4	4	4	18024-8	SCR,BHC(M4x12)SHEAR HOLDER	54
–	2	2	2	2	2	2	9-18023-6	SCR,SHC(M4x14)TERM HLD DWN	53
–	1	1	1	1	1	1	18030-1	NUT,HEX(M3)HOLD DOWN	52
–	1	1	1	1	1	1	811242-5	BUMPER, HOLDDOWN	51
–	1	1	1	1	1	1	690753-2	SPACER, TONKER	50
–	1	1	1	1	1	1	18024-3	SCR,BHC(M3X10)CAM	49
–	–	1	–	–	1	–	1338675-1	CAM, PRE FEED 30 & 40 mm ST	48
–	1	–	1	1	–	1	1338676-1	CAM, POST FEED 30 & 40 mm ST	47
–	1	1	1	1	1	1	1320999-3	APPLICATOR BASIC SUBASSY	46
–	1	1	1	1	1	1	690191-1	PLUG, NYLON	45
–	1	1	1	1	1	1	1338660-3	RAM	44
									43
									42
–	1	1	1	1	1	1	2-18024-6	SCR,BHC(M8X25)RAM	41
									40
–	1	1	1	1	1	1	690125-1	SHIM SUBASSY	39
–	1	1	1	1	1	1	469367-9	SPACER, FINE ADJUST	38
–	1	1	1	1	1	1	879103-3	FINE ADJUST HEAD SUBASSY	37
									36
									35
–	1	1	1	1	1	1	1320934-6	SUPPORT, TERMINAL	34
–	2	2	2	2	2	2	1-18024-0	SCR,BHC(M4X20)STRIP GUIDE	33
–	1	1	1	1	1	1	18027-2	WASHER, FLAT(M4)	32
–	1	1	1	1	1	1	1-18023-2	SCR,SKT CAP(M4X12)MOUNT BLOCK	31
–	1	1	1	1	1	1	1320908-4	SPACER, STRIP GUIDE	30
–	1	1	1	1	1	1	1633073-1	STRIP GUIDE PLATE ASSY	29
									28
–	2	2	2	2	2	2	1-22284-0	SPRING, DRAG	27
–	1	1	1	1	1	1	356835-1	LEVER, DRAG RELEASE	26
–	1	1	1	1	1	1	240792-1	DRAG, TERMINAL	25
–	1	1	1	1	1	1	1320928-1	PLATE, STRIP GUIDE	24
–	1	1	1	1	1	1	980371-4	SCR,SHC SHLD	23
–	1	–	1	1	–	1	690472-2	STRIPPER	22
–	1	1	1	1	1	1	1-18023-1	SCR,SHC(M4X10)STRIPPER	21
–	4	4	4	4	4	4	18025-2	WASHER,LOCK(M4)STRIPPER	20
–	–	1	–	–	1	–	690472-1	STRIPPER	19
									18
1 –	1	–	–	1	–	–	1338684-1	HOLDER, SHEAR, FRONT (NO-CUT)	17
									16
									15
									14
									13
–	1	1	1	1	1	1	5-22280-0	SPRING, SHEAR	12
–	1	1	1	1	1	1	356885-4	STOP, SHEAR	11
1 –	–	1	1	–	1	1	1320921-1	HOLDER, SHEAR, FRONT (CUT)	10
1 –	1	1	1	1	1	1	409284-2	SHEAR, FLOAT (FRONT)	9
1 1	2	2	2	1	1	1	1-1333201-2	ANVIL	8
–	1	1	1	1	1	1	240641-2	SPACER, DEPRESSOR (REAR)	7
									6
–	1	1	1	1	1	1	2-455889-0	DEPRESSOR, SHEAR (FRONT)	5
–	1	1	1	1	1	1	238011-7	SPACER, BLOCK CRIMPER	4
1 1	2	2	2	1	1	1	1366753-1	CRIMPER, INSULATION	3
									2
1 1	2	2	2	1	1	1	1-456402-7	CRIMPER, WIRE	1
	-77	-76	-72	-71	-6	-2	-1	PART NO	DESCRIPTION	ITEM NO

← REVISION OF EACH ASSY NO (WHEN BLANK, USE DWG REVISION)

QTY REQD PER ASSY — PARTS LIST

P	F	LTR	REVISION RECORD	APP	DATE
		B	ECR-06-001817	GB	1-06
		A	SEE ECO-05-009672	MC	SEP05

DIMENSIONS: mm [INCHES]
DO NOT SCALE PRINT.
TOLERANCES UNLESS OTHERWISE SPECIFIED:
1 PLC DEC ±0.5 [.02 IN]
2 PLC DEC ±-
3 PLC DEC ±-
ANGLES ±-
SURF TEXTURE: √
REMOVE BURRS, BREAK SHARP EDGES R0.38 MAX

MATL – – HT TR – – FIN – –

DR 15SEP05 M.CLIFFORD APP 15SEP05 F.BACKHURST
CHK – – REL 16SEP05 M.CLIFFORD

AMP Incorporated Harrisburg, PA 17105-3608

NAME FINE ADJ SIDE FD HD-I APPL
MACHINE REF HD-I APPL
SCALE – D DWG NO 1528240 SHEET 1 OF 1 REV B

CAGE CODE 00779 CUSTOMER AND ASSEMBLY DRAWING RESTRICTED TO –

THIS DRAWING IS A CONTROLLED DOCUMENT.

LAYOUT L1426125

SET UP GAGE 458637-3

THIS DRAWING IS UNPUBLISHED. © COPYRIGHT 2000 BY AMP INCORPORATED. ALL RIGHTS RESERVED. RELEASED FOR PUBLICATION ,2000 .