LEMO's B and S Series Connectors

B Series - Mechanical Keying

S Series - Hermaphroditic Keying

LEMO

Expect Success. Spec LEMO®.

• A Global Leader

Since its beginning in Switzerland in 1946, LEMO® has evolved into a worldwide leader in the design and manufacture of circular connectors, with products sold in more than 80 countries.

Today, LEMO offers a product line for almost any application, from medical equipment to test and measurement instrumentation.

• LEMO Means "Quality"

The name LEMO has become synonymous with quality and customer service in the connector industry, setting standards that others strive to meet. Our connectors are designed in an ISO 9001 business environment, ensuring the highest quality products for our customers.

• LEMO – We Deliver Reliability

Ask for LEMO connectors for any application where quality, safety and ruggedness are essential; where reliability is critical or where connectors are frequently engaged and disengaged, even in the toughest environments.

LEMO Connectors offer a unique combination of benefits:

Original QUICK-LOK™ push-pull, self-latching system saves space and time while ensuring durable connections.

Precision construction from machined brass, stainless steel or aluminum ensures safety and uniform mating.

Gold plated contacts assure excellent electrical performance.

Collet-type strain relief securely grips circumference of any round cable, protecting connection even under extreme stress.

Bend relief option offers additional cable protection, including color-coding for easy identification.

Custom Design

If we don't have it, we'll build it. Although we offer the most extensive product line in the industry, we understand that some application needs are unique. If we don't have exactly what you need, LEMO will design and build a connector that's just right for your application.

Cable Assembly

Expand the quality of the connector to the cable assembly with our one-stop shop value-added service. LEMO's skilled technicians build and test assemblies to your specifications.

Customer Support

Customer Support when you need it. Only LEMO offers extended customer service hours so you get technical support when you need it. LEMO's Customer Support Team includes in-house Product Specialists, plus a nationwide network of sales representatives and distributors.

LEMO®

Table of Contents

LEMO's Product Line

● Connectors, accessories and tools found in this catalog.

Connectors

Single contact from 2 to 150 Amps
Coaxial 50 and 75 Ω
Coaxial 50 Ω (NIM-CAMAC)
Coaxial 50 Ω for frequency → 12 GHz
Multicoaxial 50 and 75 Ω
● Multicontact from 2 to 66 contacts
High Voltage 3, 5, 8, 10, 15, 30 and 50 kV cc
Multi High Voltage 3, 5, and 10 kV cc
Triaxial 50 and 75 Ω
Quadrax
Mixed: High Voltage (HV) + Low Voltage (LV)
Mixed: Coax + LV
Mixed: Triax + LV
Thermocouple
Multithermocouple
Fiber optic singlemode
Fiber optic multimode
Mixed: fiber optic + LV
Mixed: fiber optic + coax + LV
Fiber optic singlemode OPTABALL®
Fluidic
Multifluidic
Mixed: fluidic + LV
Subminiature
Miniature
Plastic
● Printed circuit board
Remote handling
● Watertight
● Sealed (pressure and/or vacuum)
With plastic outer shell
● With aluminium outer shell
With stainless steel outer shell
With special radiation resistant insulator material
With screw thread coupling for very high pressure
With microswitch

Patch Panels

For audio-mono applications: triax
For audio-mono applications: 3 contacts
For audio-stereo applications: quadrax
For audio-stereo applications: 6 contacts
For video applications: coax 75 Ω

Patch Panels

For video HDTV applications: 3 coax 75 Ω + 2LV
For fiber optic applications

Adaptors

For BNC, C, UHF, N, CINCH, GEN-RADIO connectors
For TNC, SMA connectors

Accessories

Insulator for crimp contacts
Crimp contacts
Coaxial contacts
Triaxial contacts
Fiber optic contacts
Fiber optic ferrules
Caps and bend relief
● Heatshrink boot
● Insulating washers
Double plastic panel washers
● Locking washers
Tapered washers
● Hexagonal nuts
Conical nuts
Round nuts
Notched nuts
Grounding washers
Lead-through with cable collet

Tooling

● Wrenches
Wrenches for assembling plug
Assembly tool
Pliers
● Tap
● Crimping tools
● Positioners
Crimping dies
● Banding Tool
● Extractors
Insertion testing tool for crimp contacts
Fiber optic termination workstation
Fiber optic polishing tools

On request

Filtered connectors
Connectors with special alloy housing
Mixed special connectors
Assembly onto cable

Characteristics of Primary Series

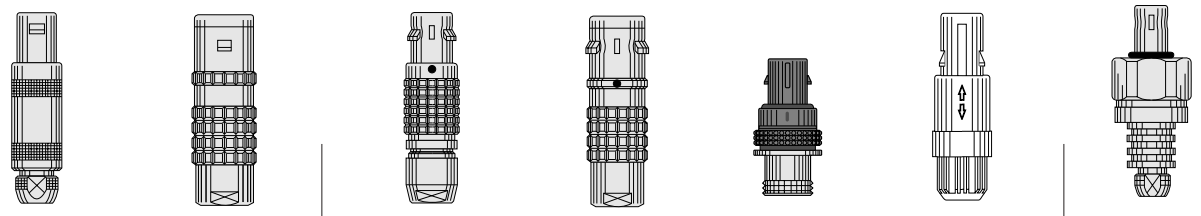

Series	**STANDARD**	**WATERTIGHT**	**KEYED**	**KEYED WATERTIGHT**		**PLASTIC**	**SCREW**
	01 (Minax)	0E to 6E	00 (multicontact)	0K to 5K	0F to 5F	REDEL® 1P	03
	00 (NIM-CAMAC)	3T	0B to 5B	2N to 5N		REDEL® 2P	0V to 5V
	00 (single contact)	4M	2G/5G			REDEL® 3P	0W to 5W
	05 / R0	REDEL® F					2U to 5U
	0S to 6S						
	0A / 4A						
	1D / 2C						
	1Y-3Y-6Y						
Latching	Push-Pull						Screw
Key	Stepped insert (Half-Moon)		Key (G) or other key-way code		Key (G) or other key-way code	Key (G) or other key-way code	Key (G) or stepped insert (Half-Moon)
Shell	Metal or plastic	Metal	Metal or plastic	Metal	Metal	Plastic	Metal
Insert	Hermaphroditic or cylindrical		Cylindrical				Hermaphroditic or cylindrical
Contact	Solder or printed circuit		Solder, crimp or printed circuit				Solder (crimp or PC)

LEMO's Line of Series by Types

Note:

■ = included in this catalog
● = available but not included in this catalog.

	Series	Single contact	Coaxial 50 Ω	Coaxial 75 Ω	Multicontact	High Voltage	Triaxial 50 Ω	Triaxial 75 Ω	Quadrax	Multi HV	Multi Coaxial	Mixed HV+LV	Mixed Coax+LV	Mixed Triax+LV	Fiber Optic	Multi FO	Mixed FO+LV	Fluidic	Multi fluidic	Mixed fluidic+LV	Thermocouple
		Types																			
Hermaphroditic Keying	01		●																		
	00	■	●				●											●			
	05					●															
	R0		●																		
	0A		●	●																	
	0S	■	■		■	●	■														●
	1S	■	■	■	■	●	■														●
	2S	■	■	■	■	●	■	■				■									●
	3S	■	■	■	■	●	■	■		■		■	■								
	4S	■	■	■	■	●	■	■		■	■	■	■								
	5S	■	■	■	■					■	■	■	■								
	6S				■						■		■								
	1D								●												
	2C		●		■																
	4A							●													
	1Y-3Y-6Y					●															
Hermaphroditic Keying — Watertight	0E	●	●		●	●	●														●
	1E	●	●	●	●	●	●														●
	2E	●	●	●	●	●	●	●				●									●
	3E	●	●	●	●	●	●	●		●		●	●								
	4E	●	●	●	●		●	●				●	●								
	5E	●			●					●	●	●	●								
	6E				●						●		●								
	3T			●				●													
	4M						●	●													
Mechanical Keying	00				■										●						
	0B				■										●			●			●
	1B				■							■									●
	2B				■					■	■	■	■	■			●			●	●
	3B				■						■	■	■	■		●	●		●	●	
	4B				■					■	■	■	■	■		●	●		●	●	
	5B				■					■	■	■	■	■		●					
	2G				■																
	5G									●											
Mechanical Keying — Watertight	0K				●										●			●			●
	1K				●							●									●
	2K				●						●	●	●	●			●			●	●
	3K			●	●						●	●	●	●		●	●		●	●	
	4K				●					●	●	●	●	●		●	●		●	●	
	5K				●					●	●	●	●	●		●					
	0F to 5F				●																
	3N to 5N				●																
Plastic	1P to 3P				●								●	●				●			
Screw	03		●		●																
	0V	●	●		●		●													●	
	1V	●	●	●	●		●													●	
	2V	●	●	●	●		●	●				●								●	
	3V	●	●	●	●		●	●		●		●	●								
	4V	●	●	●	●		●	●				●	●								
	5V	●			●					●	●	●	●								
	0W to 5W				●						●	●	●	●			●			●	●
	2U to 5U				●										●	●	●				

QUICK-LOK™ Push-Pull Self-Latching System

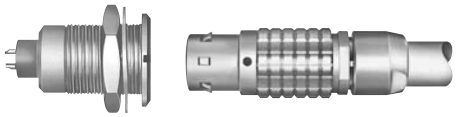

LEMO's Original QUICK-LOK push-pull, self-latching system is renowned worldwide for its easy and quick mating and unmating features. It provides absolute security against vibration, shock or pull on the cable, and facilitates operation in a very limited space, and offers unique advantages for all applications:

Speed – Engage connectors simply and quickly by pushing plugs axially into mating receptacles. Pull on outer shell to remove plug easily.

Space Savings – Just one finger clearance on two sides is needed to engage and disengage connectors, so there's no need to twist or turn a locking ring.

Reliability – Connections are reliable and assured when locking mechanism is engaged.

Ruggedness – Sturdy design, with sealed models to various IP levels.

How QUICK-LOK™ Works

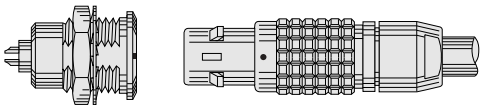

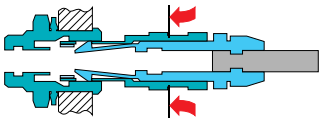

Engaging
QUICK-LOK allows the connector to be mated by simply pushing the plug straight into the receptacle.

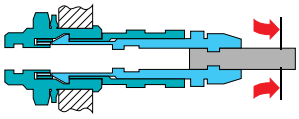

Latched
Once firmly latched, connection cannot be broken by pulling on the cable or any other component part other than the outer release sleeve.

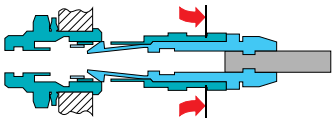

Disengaging
When required, the connector is disengaged by a single straight pull on the outer release sleeve. This first disengages the latches and then withdraws the plug from the receptacle.

Key:
Fv = average latching force.
Fd = average unmating force with axial pull on the outer release
Fa = average pull force with axial pull on the collet nut.

Latching Characteristics for B, S, 2C and 2G Series Connectors

Force (N)	Series							
	00	0B	1B	2B	2G	3B	4B	5B
Fv	9	10	14	15	12	17	39	48
Fd	7	8	11	12	12	14	38	38
Fa	120	250	300	400	400	550	700	800

Force (N)	Series								
	00	0S	1S	2C	2S	3S	4S	5S	6S
Fv	9	14	15	12	17	20	40	60	70
Fd	7	9	10	12	11	14	25	40	55
Fa	120	140	250	400	350	500	650	750	900

Notes: the forces were measured on outer shell not fitted with contacts. The mechanical endurance represents the number of cycles after which the latching system is still effective (1 cycle = 1 latching/unlatching – 300 cycles per hour).

Mechanical endurance: 5000 cycles.

The values were measured according to the standard MIL-STD-1344A method 2013.1.

1N = 0.102kg.

General Characteristics

Materials and Surface Treatment

Outer Shell

Brass

In most cases, LEMO connectors have a brass outer shell which is suitable for most general purpose applications, including civilian and military. The brass outer shells have a chrome nickel-plated surface which ensures very good protection against industrial atmosphere, salt air and most corrosive agents.

Alternative protective coatings are available to satisfy other specific environmental conditions:
Electrolytic nickel; Nickel-gold; and Nickel-black chrome. After the black chrome treatment, the part is coated with a protective organic film.

Other metallic components

In general, most metallic components are manufactured in brass. However, bronze or beryllium copper are used where good elasticity is required (for example: grounding crown). Depending upon the application, these parts have electrolytic nickel or nickel-gold plating.

These parts can also be manufactured in stainless steel.

Sealing gasket

In general, sealing gaskets are made of silicone rubber MQ/MVQ. However, for vacuum-tight receptacles and couplers, gaskets are made of fluorosilicone rubber (FPM).

Sealing resin

An epoxy resin is used to seal both watertight and vacuum-tight receptacle and coupler models.

Component	Material (Standard)	Surface treatment (µm)										Notes
		chrome			nickel		gold			black chr.		
		Cu	Ni	Cr	Cu	Ni	Cu	Ni	Au	Ni	Cr	
Outer shell, collet nut, conical nut or notched nut and oversized collet	Brass (UNS C 38500)	0.5	3	0.3	0.5	3	0.5	3	0.5	1	2	
	Stainless steel (AISI 303, 304 or 316L)	without treatment										
	Avional (AA 2007)	–	–	–	–	5	–	–	–	–	–	1)
	Aluminium alloy (AA 6012)	anodized										
	POM (Delrin® or Ertacetal®), Polyoxymethylene, black	–										2)
	PEEK, Polyether etherketone, beige	–										3)
	PSU (Udel®), Polysulfone, grey or white	–										4)
	PPSU (Radel®), Polyphenylsulfone, cream	–										4)
	PA.6 (Grilon®), Polyamid	–										5)
	PPS (Ryton®), Polyphenilene sulfide, brown	–										6)
Grounding crown	Bronze (UNS C 54400) or special brass	–	–	–	0.5	3	0.5	3	1.0	–	–	7)
	Beryllium Copper (UNS C 17300)	–	–	–	0.5	3	0.5	3	1.0	–	–	8)
	Stainless steel (AISI 416 or 316L)	without treatment										9)
Latch sleeve	Special brass	0.5	3	0.3	0.5	3	0.5	3	0.5	–	–	
	Stainless steel (AISI 416 or 316L)	without treatment										9)
Locking washer	Bronze (UNS C 52100)	–	–	–	0.5	3	0.5	3	0.5	–	–	
Hexagonal or round nut	Brass (UNS C 38500)											
	Stainless steel (AISI 303, 304 or 316L)	without treatment										10)
	Aluminium alloy (AA 6012)	anodized natural										10)
Other metallic components	Brass (UNS C 38500)	–	–	–	0.5	3	0.5	3	0.5	–	–	
	Stainless steel (AISI 303, 304 or 316L)	without treatment										
O-ring and gaskets	Silicone MQ/MVQ or FPM/FKM (Viton®)	–										11)
Sealing resin	Epoxy (Araldite® or Stycast®)	–										

Notes:
standards for surface treatment are as follows:
Chrome-plated: FS QQ-C-320B;
Nickel-plated: FS QQ-N-290A, or MIL-C-26074C;
Gold-plated: ISO 4523; and
Black chrome: MIL-C-14538C with a minimum of 10 µm of lacquer protection.

1) anthracite color (other colors upon request)
2) for FFP, PCP and ERN models of the 0S to 3S series
3) for FFP, PCP and ERN models of the 0S to 3S series and FGG and ENG models of the 1B, 3B and 4B series
4) for the FGY and ENY models of the 2B and 3B series
5) for bridge plugs of the B series
6) for S and B series elbow receptacles for printed circuits
7) gold-plating for single contact types
8) used in 00 series free and fixed receptacles and couplers
9) AISI 416 steel is used with shells made of AISI 303 or 304
10) delivered with free and fixed receptacles with aluminium alloy or stainless steel shell

Electrical Characteristics

Shell electrical continuity: (measured according to IEC 60512-2 test 2f)

Test current: 1A
A = Ampmeter
mV = Millivoltmeter
G = Generator

R_1 Values with grounding crown and latch sleeve or inner-sleeve nickel-plated.

R_2 Values with gold-plated grounding crown and nickel-plated latch sleeve or inner sleeve.

Standard Series

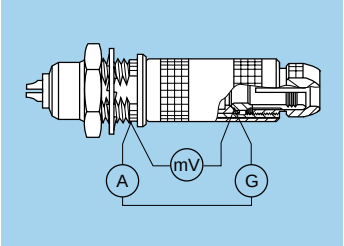

Series	R_1 (mΩ)	R_2 (mΩ)
00	3.5	2.8
0S	2.8	1.6
1S	2.2	1.5
2C	–	–
2S	1.8	1.2
3S	1.6	1.2
4S	1.4	1.0
5S	1.4	1.0
6S	1.0	0.5

Keyed Series

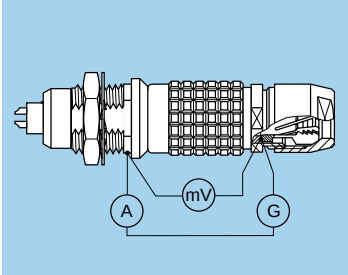

Series	R_1 (mΩ)	R_2 (mΩ)
00	3.5	2.8
0B	3.5	1.3
1B	2.5	1.1
2B	2.2	0.9
2G	-	-
3B	2.2	0.7
4B	1.5	0.5
5B	1.5	0.3

Electromagnetic compatibility (EMC) and shielding efficiency

The electromagnetic compatibility of a device can only be en-sured by meeting a number of basic rules with the design of the device and by carefully selecting components, cables and connectors.

Electrical and electronic devices are to be designed to ensure the following:

a) Reduce the emission of generated electromagnetic interference to a level where radios and telecommunication and other devices can properly function;
b) Electromagnetic immunity against electromagnetic interference so that they can properly function.

When selecting a connector, screen or shielding efficiency and low resistance to electric continuity between the cable and the connector should be considered.

The design of LEMO connectors with metal shell and grounding crown guarantee optimum shielding efficiency in all applications where electromagnetic compatibility (EMC) is critical.

The performance of a connector is measured through shielding efficiency, a value that represents the ratio between the electromagnetic field on the outside and the inside of the shell. Our measurements are carried out according to the IEC 60169-1-3 standard.

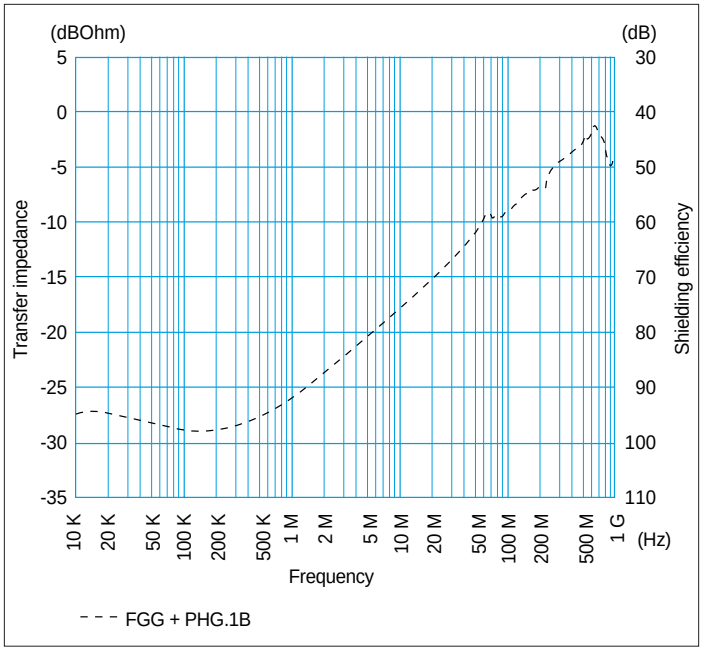

The performance of B and S series connectors is comparable to the results of measurements carried out on a pair of FGG + PHG.1B connectors.

Insulator

Plastic material used by LEMO for manufacturing insulators is selected according to the electric and thermal properties required for the various connector types. Characteristics examined for the two connector types are:

- Dielectric strength;
- Comparative tracking index;
- Surface and volume resistivity;
- Continuous service temperature;
- Water absorption;
- Radiation resistance;
- Flammability rating;
- Resistance to hydrocarbon.

Mechanical and Electrical Properties

LEMO uses PEEK (Polyether Etherketone) for the insulator material. The performance of this thermo-plastic material is enhanced by the addition of glass fibers in the resin to acheive very high mechanical strength, to increase dielectric strength and to reduce water absorption rate. The above features of PEEK, plus its excellent chemical and radiation resistance, make it ideal for most applications. Sealing grommets are molded from Viton®. Such polymer has inherently excellent electrical insulating properties which does not change when exposed to adverse environments.
Insulating resistance >$10^{12}\Omega$ (per MIL-STD-1344A method 3003.1).

Radiation resistance

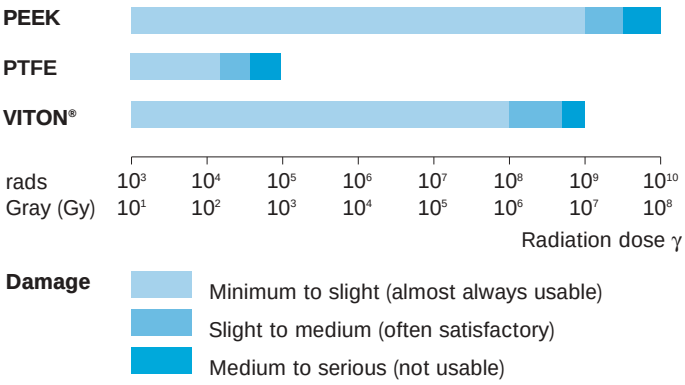

Note: Technical data in this chapter provide general information on plastics used by LEMO as electrical insulators. LEMO reserves the right to propose new materials with better technical characteristics, and to withdraw, without notice, any material mentioned in the present catalog or any other publications edited by LEMO S.A. and/or its subsidiaries. LEMO SA and its subsidiaries use only plastic granules, powder or bars supplied by specialized companies, and thus cannot in any case take responsibility with regard to this material.

Technical Characteristics

Technical characteristics of plastic materials

Type	Standard	Units	POM	PEEK	PSU	PPSU	PPS	PA.6	Silicone	FPM	Epoxy
Density	ASTM D 792	–	1.4	1.3-1.4	1.24	1.3	1.67	1.14	~1.2	~1.9	1.58
Tensile strength (at 73.4° F)	ASTM D 638/ ISO R527	MPa	70-80	92-142	70	70	121	55	> 9	> 12	16
Flexurale strength (at 73.4° F)	ASTM D 790/ ISO R178	MPA	–	170	106	91	179	75	–	–	24
Dielectric strength	ASTM D 149/IEC 60243	kV/mm	60	19-25	17-20	15	17	35	18-30	–	15
Volume resis. at 50% HR and 73.4° F	ASTM D 257/IEC 60093	Ω • cm	10^{15}	10^{16}	$5x10^{16}$	–	10^{16}	10^{15}	10^{14}	–	10^{14}
Surface resistivity	ASTM D 257	Ω	10^{13}	10^{15}	–	–	–	–	–	–	–
Thermal conductivity	ASTM C 177	W/K • m	0.31	0.25	0.26	–	0.3	–	–	–	0.8
Comparative tracking index	IEC 60112	V	CTI 600	CTI 150	CTI 150	–	CTI 200	CTI 600	–	–	CTI>600
Maxi. continuous service temperature	UL 746	°F	194	482	284	356	428	176	392	392	176
Min. continuous service temperature	UL 746	°F	-58	-67	-76	-58	-106	-40	-58	-4	-4
Max. short-time service temperature	–	°F	284	572	320	392	482	302	> 482	572	248
Water absorption in 24h at 73.4° F	ASTM D 570/ISO R62A	%	0.85	0.12	0.3	0.37	< 0.05	> 3	–	–	0.25
Radiation resistance	–	Gy[1)]	$8x10^3$	10^7	10^5	–	> 10^7	$5x10^3$	10^5	$8x10^4$	$2x10^6$
Flammability rating	ASTM D 635/UL 94	–	HB	V-0/3.2	V-0/4.4	V-0/1.6	V-0/5V	V-2	–	–	V-0/4
Resistance to steam sterilization	–	–	bad	excel.	good	excel.	excel.	bad	good	good	bad

Notes: [1)] 1 Gy (Gray) = 100 rad

ASTM = American Society for Testing Material
ISO = International Standards Organization
UL = Underwriters Laboratories
IEC = International Electrotechnical Commission

Note: Values of insulation resistance between contacts are given on page 9.

Electrical Contact

Technical Description

The secure reliable electromechanical connection achieved with LEMO female cylindrical contacts is mainly due to two important design features:

1. *Prod proof entry* on the mating side which ensures perfect concentric mating even with carelessly handled connectors; and
2. *The pressure spring*, with good elasticity, maintains a constant even force on the male contact when mated. The leading edge of the pressure spring preserves the surface treatment (gold-plated) and prevents undue wear.

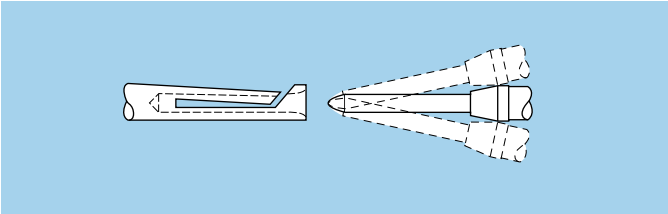

Contact Material and Treatment

LEMO female contacts are made of bronze beryllium (QQ-C-530) or bronze (UNS C 54400). These materials are chosen because of their high modulus of elasticity, their excellent electrical conductivity and a high mechanical strength.

LEMO male solder and printed circuit contacts are made of brass (UNS C 38500). Male crimp contacts are made of brass (UNS C 34500) or annealed brass (UNS C 38500) with optimum hardness (HV) for crimping onto the wire.

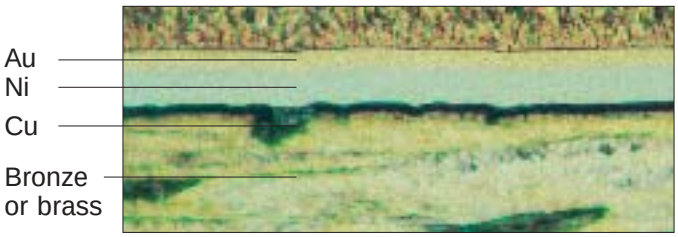

Notes: The standard surface treatment are as follows:
Nickel: FS QQ-N-290A or MIL-C-26074C; and
Gold: ISO 4523.
1) Minimum value 2) For elbow printed circuit contacts
3) Treatment completed by 6 µm Sn-Pb tin-plating

Type	Material (standard)	Surf. treatment (µm)		
		Cu	Ni	Au[1]
Male crimp	Brass (UNS C 34500)	0.5	3	1.0
	Brass (UNS C 38500)			
Male printed circuit	Brass (UNS C 38500)			
Femalle crimp	Bronze (UNS C 54400) Cu-Be (FS QQ-C-530)	0.5	3	1.5
Female printed circuit				
Clips	Cu-Be (FS QQ-C-530)	–	–	–
	Stainless steel			
Wire[2]	Brass	–	3[3]	–

Thickness comparison between the outside and the inside of female contacts

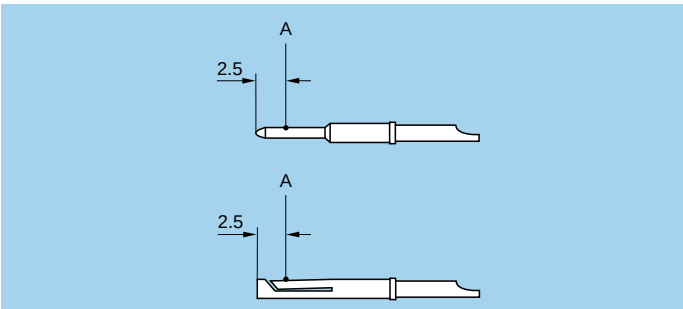

Note: A = inspection point

Contact ø A (mm)	Gold thickness		
	male (µm)	female	
		outside (µm)	inside (%)
0.5	1.0	1.5	65
0.7	1.0	1.5	70
0.9	1.0	1.5	75
1.3	1.0	1.5	75
1.6	1.0	1.5	75
2.0	1.0	1.5	75
3.0	1.0	1.5	75
4.0	1.0	1.5	75
5.0	1.0	1.5	75
6.0	1.0	1.5	75
8.0	1.0	1.5	75
12.0[1]	–	–	–

Notes: 1) Contacts are silver plated.

Electrical Contact

Contact resistance with relation to the number of mating cyles

Maximum values measured after the mating cycles and the salt spray test according to IEC 60512-6 test 11f.

A ø (mm)	Contact resistance (mΩ)			A ø (mm)	Contact resistance (mΩ)		
	1000 cycles	3000 cycles	5000 cycles		1000 cycles	3000 cycles	5000 cycles
0.5	7.5	8.3	8.7	3.0	2.0	2.2	3.1
0.7	5.6	5.7	6.1	4.0	1.6	2.0	2.8
0.9	4.1	4.2	4.8	5.0	1.4	–	–
1.3	2.8	2.9	3.6	6.0	1.2	–	–
1.6	2.6	2.7	3.5	8.0	0.8	–	–
2.0	2.9	3.1	3.3	12.0	0.7	–	–

(measured according to IEC 60512-2 test 2a)

Insulation resistance between the contacts and contact/shell

(measured according to IEC 60512-2 test 3a)

Insulating material	Multicontact	Single contact
	PEEK	PTFE
new	> 10^{12} Ω	> 10^{12} Ω
after humidity test[1)]	> 10^{10} Ω	> 10^{10} Ω

Note:
1) 21 days at 95% RH according to IEC 60068-2-3.

Solder Contacts

The conductor bucket of these contacts is machined at an angle to form a cup into which the solder can flow.

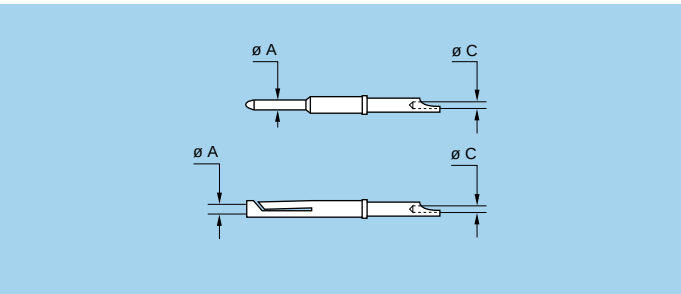

Note:
1) For S, 2C, 2G series
2) For 00 multicontact series
3) For a given AWG, the diameter of some stranded conductor designs is larger than the solder cup diameter. Make sure that the maximum conductor diameter is smaller than ø C.

Contact		Conductor			
		Solid		Stranded	
ø A (mm)	ø C (mm)	AWG max.	Section max (mm^2)	AWG max.	Section max (mm^2)
0.5[2)]	0.40[2)]	28	0.09	30	0.05
0.5	0.45	28	0.09	28	0.09
0.7[1)]	0.60[1)]	24	0.25	26	0.14
0.7	0.80	22	0.34	22[3)]	0.34
0.9	0.80	22	0.34	22[3)]	0.34
1.3	1.00	20	0.50	20[3)]	0.50
1.6	1.40	16	1.00	18	1.00
2.0	1.80	14	1.50	16	1.50
3.0	2.70	10	4.00	12	4.00
4.0	3.70	10	6.00	10	6.00
5.0	5.20	–	–	8	10.00
6.0	5.20	–	–	8	10.00
8.0	7.00	–	–	4	16.00
12.0	6.20	–	–	6	16.00

Electrical Contact

Crimp Contacts

The square form crimp method is used (MIL-C-22520F, class I, type 2) photo 1 for single contact contacts.

For multicontact contacts the standard four-identer crimp method is used, MIL-C-22520F, class I, type 1), photo 2. The crimp method requires a controlled compression to obtain a symmetrical deformation of the conductor strand and of the contact material. The radial hole in the side of the contact makes it possible to check whether the conductor is correctly positioned within the contact. A good crimping is characterized by only slightly reduced conductor section and practically no gap.

For optimum crimping of bronze or brass contacts they are annealed to relieve internal stress and reduce material hardening during the crimping process.

Only the crimping zone is annealed with the help of an induction heating machine designed by the LEMO Research and Development Department (see photo 3).

– practical, quick contact fixing outside the insulator
– possible use at high temperature
– no risk of heating the insulator during the conductor-contact fixing
– high tensile strength

Crimp contacts are available in standard version (microphoto 1) for mounting maximum size conductors. For some dimensions, these crimp contacts can be produced with reduced crimp barrels (microphoto 2) for mounting reduced size conductors.

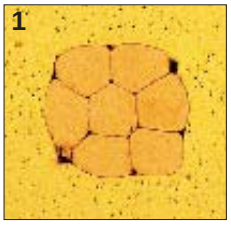

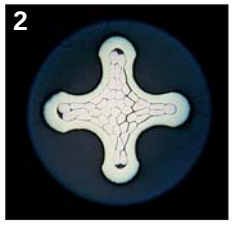

Contacts are provided in two forms: with a standard crimp barrel for large conductors (see fig. 1), or with a reduced crimp barrel for smaller conductors (see fig. 2).

Fig. 1

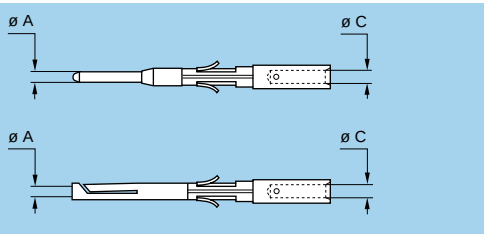

Fig. 2

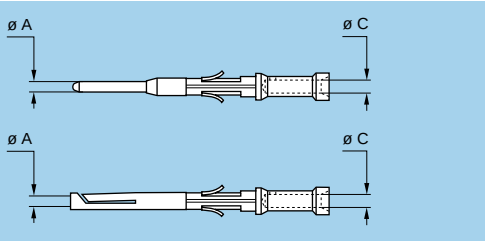

Note: 1) For a given AWG, the diameter of some stranded conductor designs is larger than the solder cup diameter. Make sure that the maximum conductor diameter is smaller than ø C.

A detailed range of conductor dimensions that can be crimped into our contacts is given on the table below.

Contact			Conductor stranded				F_r (N)
			AWG stranded		Section (mm^2)		
ø A (mm)	ø C (mm)	Form per fig.	min.	max.	min.	max.	
0.5	0.45	1	32	28	0.035	0.09	12
0.7	0.80	1	26	22[1)]	0.140	0.34	22
	0.45	2	32	28	0.035	0.09	
0.9	1.10	1	24	20	0.250	0.50	30
	0.80	2	26	22[1)]	0.140	0.34	
	0.45	2	32	28	0.035	0.09	
1.3	1.40	1	20	18	0.500	1.00	40
	1.10	2	24	20	0.250	0.50	
	0.80	2	26	22[1)]	0.140	0.34	
1.6	1.90	1	18	14[1)]	1.000	1.50	50
	1.40	2	22	18	0.340	1.00	
2.0	2.40	1	16	12[1)]	1.500	2.50	65
	1.90	2	18	14	1.000	1.50	
3.0	2.90	1	14	10[1)]	2.500	4.00	75
4.0	4.00	1	12	10	4.000	6.00	90

Note: Fr = mean contact retention force in the insulator (according to IEC 60512-8 test 15a).

Printed Circuit Contacts

Printed circuit contacts are available in straight or elbow versions for certain connector types, mostly for straight and elbow receptacle models. Connection is made on flexible or rigid printed circuits by soldering.

Printed circuit contacts are gold-plated which guarantees optimum soldering, even after long-term storage. However for wave soldering, we recommend removal of the gold-plating from the contact end on the printed circuit side before soldering according to the assembly procedures.

straight

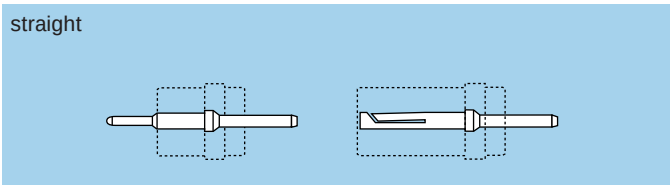

elbow

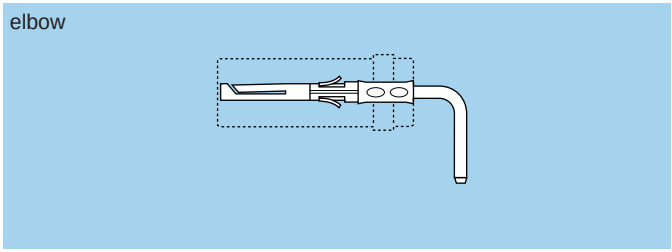

Electrical Contact

Test Voltage

Test voltage (Ue):
(measured according to the IEC 60512-2 test 4a standard).

It corresponds to 75% of the mean breakdown voltage. Test voltage is applied at 500 V/s and the test duration is one minute.

This test has been carried out with a mated plug and receptacle, with power supply only on the plug end.

Operating voltage (Us):
It is proposed according to the following ratio: $Us = \frac{Ue}{3}$

Caution:
For a number of applications, safety requirements for electrical appliances are more severe with regard to operating voltage.

In such cases operating voltage is defined according to creepage distance and air clearance) between live parts.

Please consult us for the choice of a connector by indicating the safety standard to be met by the product.

Voltage values are given in the table on insulator types for each series corresponding with values measured at sea level and are adapted to all applications up to an altitude of 2000 m.

In case a device is used at a higher altitude, air clearance between live parts has to be multiplied by the following coefficients:
(Test voltage also has to be divided by this coefficient).

altitude (m)	coefficient
2000	1.00
3000	1.14
4000	1.29
5000	1.48

Rated Current

(measured according to IEC 60512-3 test 5a).

The specified rated current can be applied simultaneously to all the contacts, corresponding with an average temperature rise of 104° F of the connector.

The current values are indicated in the table of insulator types in each series. For use at higher temperatures, acceptable rated current will be lower. It tends towards zero as the material is used at the maximum operating temperature accepted for the insulator.

In most cases, the current depends on the conductor dimension, or on the printed circuit dimension.

Caution:
In general, connectors should not be unmated while live.

For connectors with PEEK insulator, maximum admissible current will follow the curve below depending on the operating temperature T.

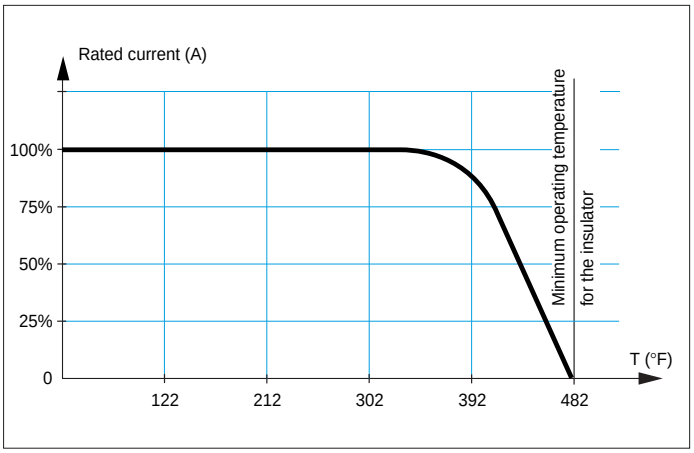

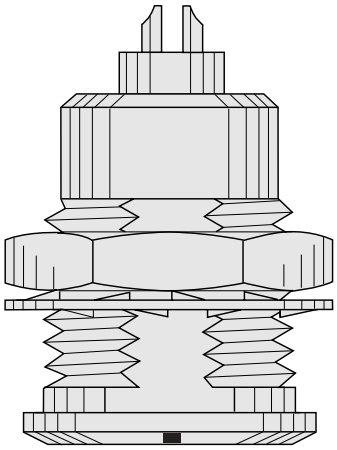

• B Series Connectors

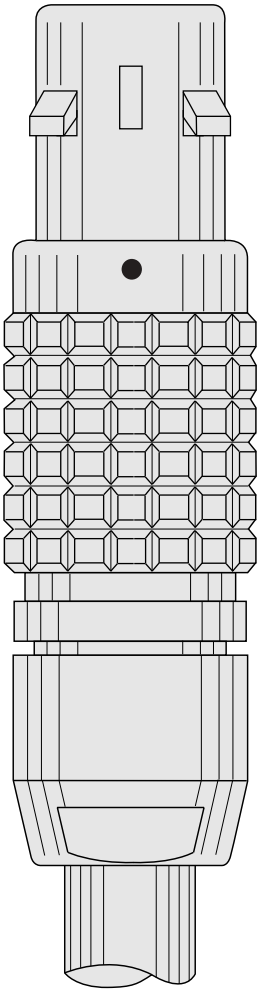

B Series Connectors

B series connectors have the following main features:
– security of the push-pull self-latching system
– multicontact types 2 to 64 contacts
– hybrid types (multicontact, high voltage, low voltage, coaxial)
– solder, crimp or printed circuit contacts (straight or elbow)
– keying system («G» key standard) for connector alignment
– multiple key options to avoid cross mating of similar connectors
– high packing density for space savings
– 360° screening for full EMC shielding.

Interconnections

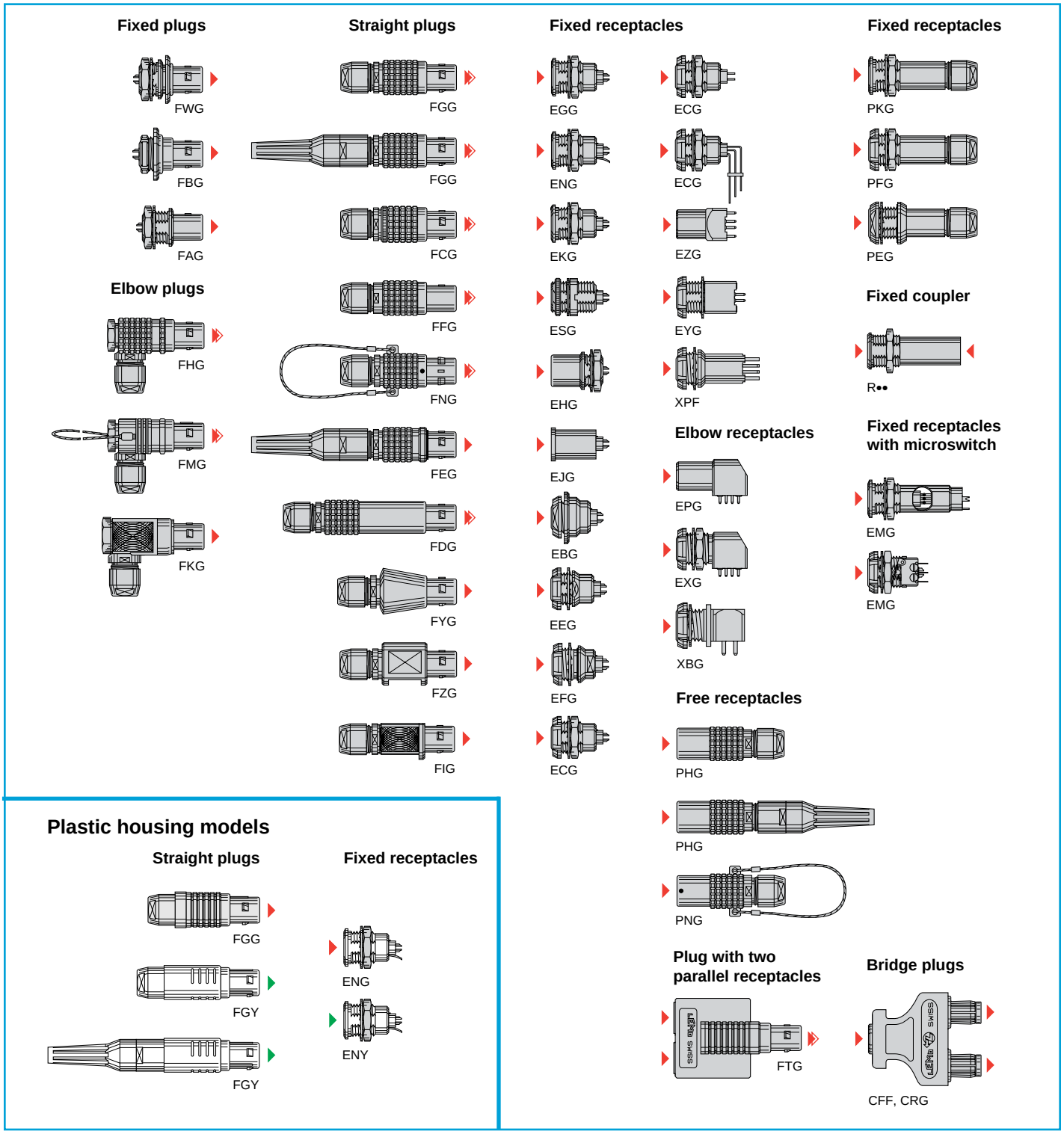

Interconnections

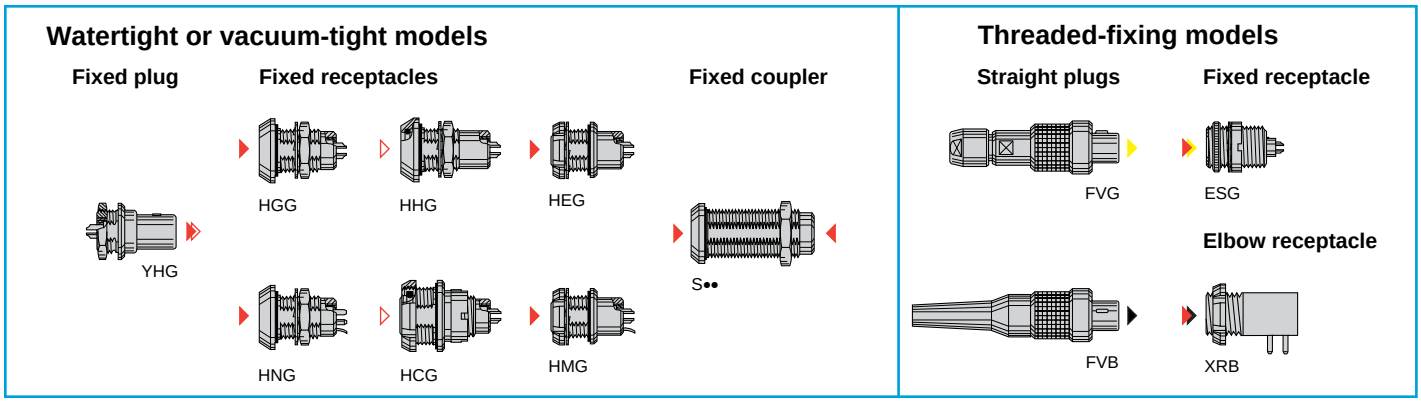

Model Description

CFF Bridge plug with two non-latching plugs
CRG Bridge plug with two non-latching plugs, and monitoring receptacle and key (G) or keys (A…M)
EBG Fixed receptacle, nut fixing, round flange, key (G) or keys (A…L and R), screw fixing (back panel mounting)
ECG Fixed receptacle with two nuts, key (G) or keys (A…M and R) (back panel mounting)
ECG Fixed receptacle with two nuts, key (G) or keys (A…F and R) and straight contact for printed circuit (back panel mounting)
ECG Fixed receptacle with two nuts, key (G) or keys (A…F) with elbow (90°) contact for printed circuit (back panel mounting)
EEG Fixed receptacle, nut fixing, key (G) or keys (A…M and R) (back panel mounting)
EFG Fixed receptacle, nut fixing, key (G) or keys (A…M), with two flats on the shell and O-ring (back panel mounting)
EGG Fixed receptacle, nut fixing, key (G) or keys (A…M and R)
EHG Fixed receptacle, nut fixing, key (G) or keys (A…M and R), and protruding shell
EJG Fixed receptacle, press or adhesive fit, key (G) or keys (A…M)
EKG Fixed receptacle, nut fixing, key (G) or keys (A…L and R), special alignment mark on the front
EMG Fixed receptacle, nut fixing, microswitch, key (G) or keys (A…L)
EMG Fixed receptacle, with two nuts, microswitch, key (G) or keys (A…L)
ENG Fixed receptacle with grounding tab, nut fixing, with key (G) or keys (A…M)
ENG Fixed receptacle with grounding tab, nut fixing, key (G or J), PEEK outer shell
ENY Fixed receptacle with grounding tab, nut fixing, keys (Y), PSU or PPSU outer shell
EPG Elbow (90°) receptacle for printed circuit, key (G) or keys (A…F) (solder or screw fixing)
ESG Fixed receptacle with two round nuts, key (G) or keys (A…L), long threaded shell (back panel mounting)
EXG Elbow (90°) receptacle for printed circuit with two nuts, key (G) or keys (A…F) (solder or screw fixing)
EYG Fixed receptacle for printed circuit, nut fixing, key (G) or keys (A…F) (back panel mounting)
EZG Straight receptacle for printed circuit, key (G) or keys (A…F)
FAG Fixed plug, non-latching, nut fixing, key (G) or keys (A…M and R)
FBG Fixed plug, nut fixing, round flange, key (G) or keys (A…L and R), screw fixing
FCG Straight plug, key (G) or keys (A…L and R), cable collet and safety locking ring
FDG Straight plug, long version, key (G) or keys (A…L), cable collet
FEG Straight plug, key (G) or keys (A…L), cable collet, front seal and nut for fitting a bend relief
FFG Straight plug, non-latching, key (G) or keys (A…M), cable collet
FGG Straight plug, key (G) or keys (A…M and R), cable collet
FGG Straight plug, key (G) or keys (A…M), cable collet and nut for fitting a bend relief
FGG Straight plug, key (G or J), cable collet, PEEK outer shell
FGY Straight plug, keys (Y), cable collet and PSU or PPSU outer shell
FGY Straight plug, keys (Y), cable collet and PSU or PPSU outer shell and nut for fitting a bend relief
FHG Elbow (90°) plug, key (G) or keys (A…M and R), cable collet
FIG Straight plug for remote handling, key (G) or keys (A…L and R), special alignment mark, knurled handling surface, cable collet
FKG Elbow (90°) plug for remote handling, key (G) or keys (A…L), special alignment mark, knurled handling surface, cable collet
FMG Elbow (90°) plug, key (G) or keys (A…M), cable collet and lanyard release, long key
FNG Straight plug, key (G) or keys (A…M and R), cable collet and lanyard release
FTG Straight plug, key (G) and two parallel receptacles
FYG Straight plug, conical shell, key (G) or keys (A…M), cable collet
FVB Straight plug, keys (B), threaded-fixing for special cable crimping
FVG Straight plug, key (G) or keys (A, B), cable collet, threaded-fixing
FWG Fixed plug, nut fixing, key (G) or keys (A…L)
FZG Straight plug for remote handling, key (G) or keys (A…L and R), cable collet
HCG Fixed receptacle, nut fixing, key (G) or keys (A…M), watertight or vacuum-tight (back panel mounting) or vacuum-tight (back panel mounting)
HEG Fixed receptacle, nut fixing, key (G) or keys (A…M), or vacuum-tight (back panel mounting)
HGG Fixed receptacle, nut fixing, key (G) or keys (A…M and R), watertight or vacuum-tight
HHG Fixed receptacle, nut fixing, key (G) or keys (A…M), watertight or vacuum-tight
HMG Fixed receptacle with grounding tab, nut fixing, key (G) or keys (A…M), watertight or vacuum-tight (back panel mounting)
HNG Fixed receptacle, nut fixing, with grounding tab, key (G) or keys (A…M), watertight or vacuum-tight
PEG Fixed receptacle, nut fixing, key (G) or keys (A…L), cable collet (back panel mounting)
PFG Fixed receptacle, with two nuts, key (G) or keys (A…M and R), cable collet (back panel mounting)
PHG Free receptacle, key (G) or keys (A…M and R), cable collet
PHG Free receptacle, key (G) or keys (A…M), cable collet and nut for fitting a bend relief
PKG Fixed receptacle, nut fixing, key (G) or keys (A…M and R), cable collet
PNG Free receptacle, nut fixing, key (G) or keys (A…L and R), cable collet with lanyard release
R•• Fixed coupler, nut fixing, key (G) or keys (A and J) at the flange end and keys (J, K or M) at the other end
S•• Fixed coupler, nut fixing, key (G) or keys (A, B, J, K and L) at the flange end and key (G) or keys (A, B, J, K and L) at the other end, watertight or vacuum-tight
XBG Elbow (90°) receptacle fixing nut for printed circuit, key (G) or keys (A, B) (back panel mounting)
XPF Fixed receptacle, nut fixing, long shell, keys (F) for printed circuit (back panel mounting)
XRB Elbow (90°) receptacle fixing nut for printed circuit, keys (B), short shell, threaded-fixing (back panel mounting)
YHG Fixed plug, nut fixing, non-latching, key (G) or keys (A…M)

Part Section Showing Internal Components

Fixed receptacle

1. outer shell
2. groundind crown
3. retaining ring
4. hexagonal nut
5. locking washer
6. insulator
7. female contact

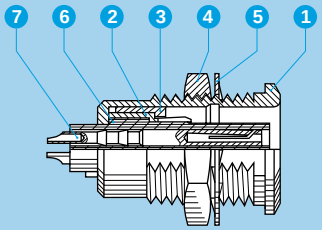

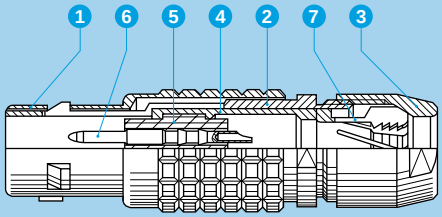

Straight plug

1. outer shell
2. latch sleeve
3. collet nut
4. split insert carrier
5. insulator
6. male contact
7. collet

Technical Characteristics

Mechanical and Climatic

Characteristics	Value	Standard
Endurance	> 5000 cycles	IEC 60512-5 test 9a
Humidity	up 95% to 140° F	
Temperature range[1)]	-67° F, +482° F	
Resistance to vibration	10-2000 Hz, 15 g	IEC 60512-4 test 6d
Shock resistance	100 g, 6 ms	IEC 60512-4 test 6c
Salt spray corrosion test	> 144h	IEC 60512-6 test 11f
Protection index (mated)	IP50	IEC 60529
Climatic category[1)]	55/175/21	IEC 60068-1

Electrical

Characteristics		Value	Standard
Shielding efficiency	at 10 MHz	> 75 dB	IEC 60169-1-3
	at 1 GHz	> 40 dB	IEC 60169-1-3

Note:
The various tests have been carried out with FGG and EGG connector pairs, with chrome-plated brass shell and PEEK insulator.
Detailed electrical characteristics, as well as materials and treatment are presented on page 5.
1) For watertight or vacuum-tight models see page 38.

Available Models (series and types)

Model	Multicontact						
	00	0B	1B	2B	3B	4B	5B
CFF		●	●				
CRG		●	●				
EBG							●
ECG	●	●	●	●	●	●	●
ECG [2)]		●	●	●	●		
EEG	●	●	●	●	●		●
EFG		●					
EGG	●	●	●	●	●	●	●
EHG	●	●	●	●	●		●
EJG		●	●	●			
EKG				●	●	●	●
EMG		●	●	●			
ENG		●	●	●	●	●	
ENG [3)]			●		●	●	
ENY [4)]				●	●		
EPG	●	●	●				
ESG	●		●				
EXG		●	●				
EYG		●	●				
EZG	●	●	●	●			

Model	Multicontact						
	00	0B	1B	2B	3B	4B	5B
FAG	●	●	●	●	●	●	●
FBG							●
FCG			●			●	●
FDG			●	●			
FEG			●	●	●		
FFG		●	●	●	●	●	
FGG	●	●	●	●	●	●	●
FGG [5)]	●	●	●	●	●	●	
FGG [3)]			●		●	●	
FGY [4) 6)]				●	●		
FGY [4) 5) 6)]				●	●		
FHG	●	●	●	●	●	●	●
FIG				●	●	●	●
FKG					●	●	
FMG		●					
FNG		●	●	●	●	●	●
FTG [1)]		●					
FVB	●						
FVG	●						
FWG			●	●			

Model	Multicontact						
	00	0B	1B	2B	3B	4B	5B
FYG		●					
FZG				●	●	●	●
HCG		●	●	●			
HEG				●			
HGG	●	●	●	●	●	●	●
HHG		●	●	●	●		
HMG		●	●		●		
HNG		●					
PEG					●	●	
PFG	●	●	●	●	●	●	●
PHG	●	●	●	●	●	●	●
PHG [5)]	●	●	●	●	●	●	
PKG	●	●	●	●	●	●	●
PNG			●	●	●	●	●
R●●		●	●	●	●	●	
S●●		●	●	●	●	●	●
XBG	●						
XRB	●						
XPF		●					
YHG		●	●	●	●		

Note:
CFF, CRG, EMG, EPG, EXG and FTG models are not available in all types. Please consult pages corresponding to the models.
1) only available with «G» key
2) with elbow (90°) printed circuit contact
3) with PEEK outer shell
4) only available with «Y» key
5) with nut for fitting a bend relief
6) with PSU or PPSU outer shell

Data Subject to Change

Available Models (series and types)

Model	Hybrid 00	0B	1B	2B	3B	4B	5B
CFF							
CRG							
EBG							●
ECG				●	●	●	●
ECG 2)							
EEG			●	●	●	●	●
EFG			●	●	●	●	●
EGG			●	●	●	●	●
EHG			●	●	●	●	●
EJG			●	●			
EKG				●	●	●	●
EMG							
ENG				●	●		
ENG 3)							
ENY 4)				●			
EPG							
ESG			●				
EXG							
EYG							
EZG							

Model	Hybrid 00	0B	1B	2B	3B	4B	5B
FAG			●	●	●	●	●
FBG							●
FCG			●			●	●
FDG			●	●			
FEG			●	●	●		
FFG			●	●	●	●	
FGG			●	●	●	●	●
FGG 5)				●	●	●	
FGG 3)							
FGY 4) 6)					●		
FGY 4) 5) 6)					●		
FHG					●	●	●
FIG				●	●	●	●
FKG							
FMG							
FNG			●	●	●	●	●
FTG 1)							
FVB							
FVG							
FWG			●	●			

Model	Hybrid 00	0B	1B	2B	3B	4B	5B
FYG							
FZG				●	●	●	●
HCG							
HEG							
HGG							
HHG							
HMG							
HNG							
PEG					●	●	
PFG				●	●	●	●
PHG				●	●	●	●
PHG 5)				●	●	●	
PKG					●	●	
PNG					●	●	●
R●●							
S●●							
XBG							
XRB							
XPF							
YHG							

Note:
See notes page 16

Alignment Key and Polarized Keying System

B series connector model part numbers are composed of three letters. The LAST LETTER indicates the key position and the contact type (male or female). For example, straight plugs with «G» key or A, B, C, D, E, F, R or Y keys, are fitted with male contacts, whereas with J, K, L, M keys, plugs are fitted with female contacts.

Receptacles with «G» key or A, B, C, D, E, F, R or Y keys, are fitted with female contacts; whereas with J, K, L, M keys, receptacles are fitted with male contacts.

Front view of a receptacle

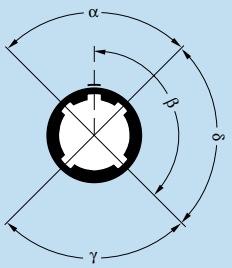

Model	# of keys	Angles	Series 00	0B	1B	Angles	Series 2B	3B	4B	5B	Contact type Plug	Receptacle	Coupler 1)	Note
●●G	1		0°	0°	0°		0°	0°	0°	0°	male	female	male-female	■
●●A	2	α	30°	30°	30°	α	30°	30°	30°	30°	male	female	male-female	■
●●B	2	α	60°	60°	60°	α	45°	45°	45°	45°	male	female	male-female	■
●●C	2	α	–	90°	90°	α	60°	60°	60°	60°	male	female	male-female	■
●●D	2	β	–	135°	135°	γ	95°	95°	95°	95°	male	female	male-female	□
●●E	2	β	–	145°	145°	β	120°	120°	120°	120°	male	female	male-female	□
●●F	2	β	–	155°	155°	β	145°	145°	145°	145°	male	female	male-female	□
●●J	2	γ	45°	45°	45°	α	37.5°	37.5°	37.5°	37.5°	female	male	female-male	■
●●K	2	γ	–	70°	70°	α	52.5°	52.5°	52.5°	52.5°	female	male	female-male	□
●●L	2	γ	–	80°	80°	γ	70°	70°	70°	70°	female	male	female-male	□
●●M	2	δ	–	110°	–	–	–	–	–	–	female	male	female-male	□
●●Y	3	–	–	–	–	β	112.5°	126°	–	–	male	female	–	■2)
		–	–	–	–	γ	100°	102°	–	–				

Front view of a receptacle

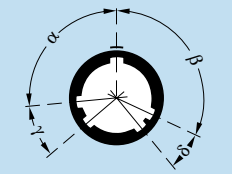

Model	# of keys	Angles	Series 00	0B	1B	Angles	Series 2B	3B	4B	5B	Contact type Plug	Receptacle	Coupler 1)	Note
●●R	5	α	–	–	–	α	–	–	–	95°	male	female	male-female	■
		β	–	–	–	β	–	–	–	115°				
		γ	–	–	–	γ	–	–	–	20°				
		δ	–	–	–	δ	–	–	–	30°				

Note:
FTG, FGY, ENY models are not available with all the keys. Please consult pages corresponding to these models.
For R●● models see explanation on page 32 and for S●● models see explanation on page 40.
1) The first contact type mentioned is always the one at the flange end.
2) Only FGY and ENY models are available.

■ First choice alternative □ Special order alternative

Data Subject to Change

Part Number Example

Straight plug with cable collet

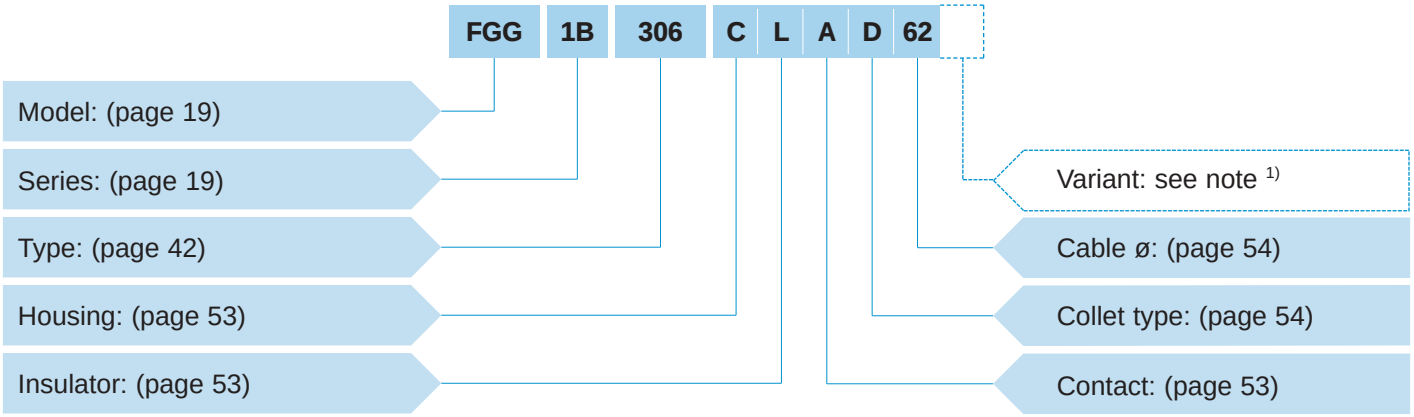

FGG.1B.306.CLAD62 = straight plug with key (G) and cable collet, 1B series, multicontact type with 6 contacts, outer shell in chrome-plated brass, PEEK insulator, male solder contacts, D type collet for 6.0 mm diameter cable.

Fixed receptacle

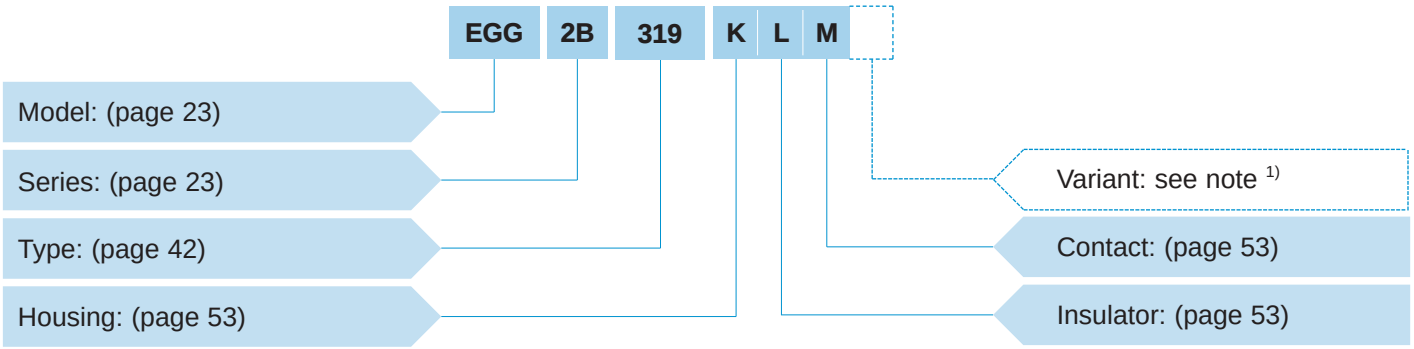

EGG.2B.319.KLM = fixed receptacle, nut fixing, with key (G), 2B series, multicontact type with 19 contacts, black chrome-plated brass outer shell, PEEK insulator, female crimp contacts.

Fixed coupler

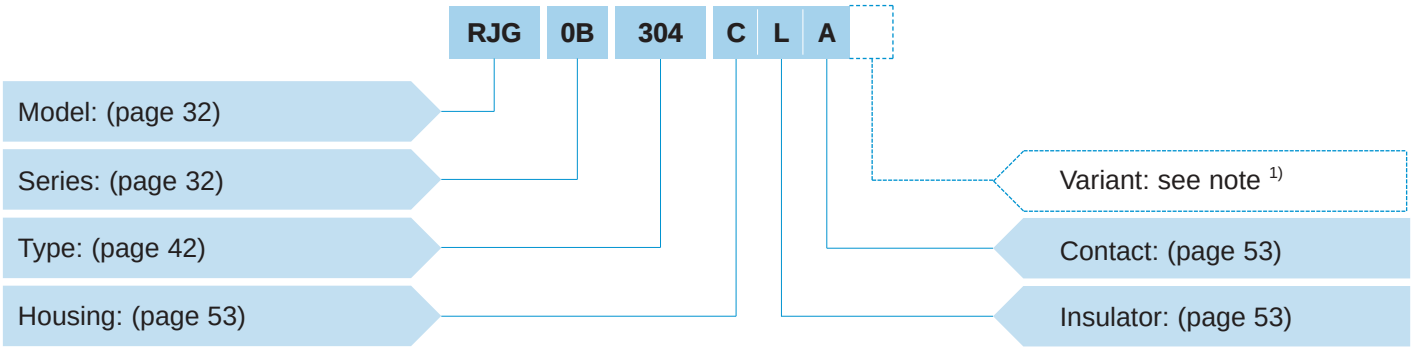

RJG.0B.304.CLA = straight fixed coupler with keys (J) at the flange end and key (G) at the other end, 0B series, multicontact type with 4 contacts, chrome-plated brass outer shell, PEEK insulator, male-female contacts.

Note: 1) The «Variant» position in the reference is used to specify either the presence of a collet nut for fitting the bend relief, or the anodized color of the housing in aluminium alloy, or the color of the bridge plug housing.
For models with collet nut for fitting the bend relief, a «Z» should be indicated and a bend relief can be ordered separately as indicated in the «Accessories» section. An order for a connector with bend relief should thus include two part numbers.
For the various housings available in colors, the corresponding letter in the part number for the color is indicated on page 55.
For the watertight models of receptacle, the letter «P» is used; for the vacuum-tight models of receptacle the letters «PV» shall be indicated.

Models

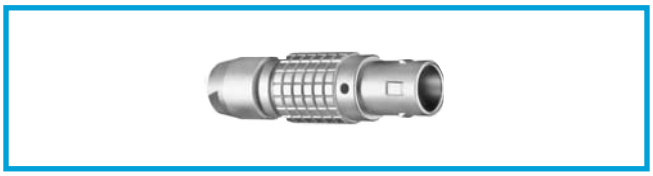

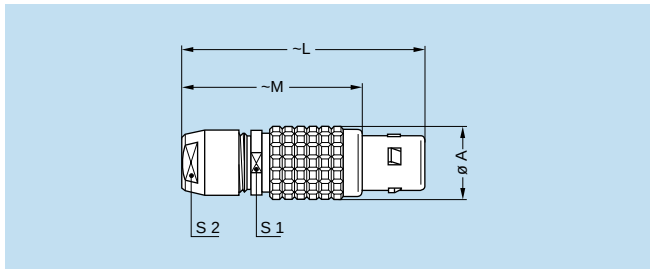

FGG Straight plug, key (G) or keys (A…M and R), cable collet

Reference		Dimensions (mm)					Availability
Model	Series	A	L	M	S1	S2	
FGG	00[1)]	6.4	28.5	20.5	5.5	5	●
FGG	0B	9.5	36.0	26.0	8.0	7	●
FGG	1B	12.0	43.0	32.0	10.0	9	●
FGG	2B	15.0	50.0	38.0	13.0	12	●
FGG	3B	18.0	58.0	43.0	15.0	14	●
FGG	4B	25.0	75.0	57.0	21.0	20	●
FGG	5B	35.0	103.0	78.0	31.0	30	○

Note: 1) The surface design of the 00 series is different.

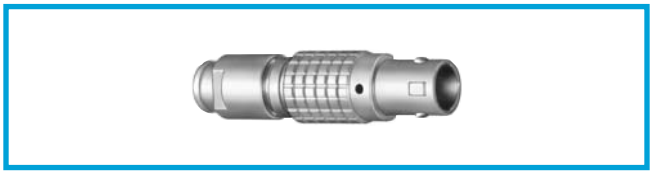

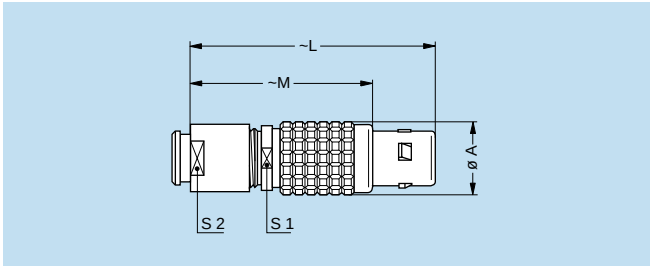

FGG Straight plug, key (G) or keys (A…M), cable collet and nut for fitting a bend relief

Reference		Dimensions (mm)					Availability
Model	Series	A	L	M	S1	S2	
FGG	00[1)]	6.4	27.5	19.5	5.5	6	●
FGG	0B	9.5	35.0	25.0	8.0	7	●
FGG	1B	12.0	42.0	31.0	10.0	9	●
FGG	2B	15.0	49.0	37.0	13.0	12	●
FGG	3B	18.0	56.5	41.5	15.0	15	●
FGG	4B	25.0	71.0	53.0	21.0	20	○

Note: 1) The surface design of the 00 series is different.
The bend relief must be ordered separately (see page 133).

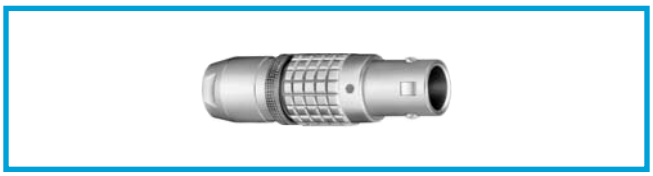

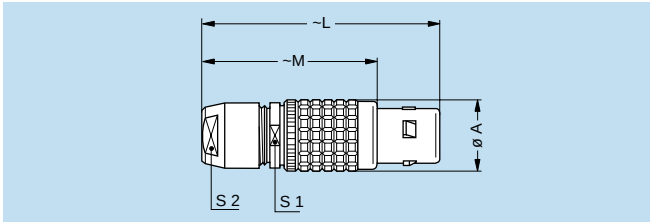

FCG Straight plug, key (G) or keys (A…L and R), cable collet and safety locking ring

Reference		Dimensions (mm)					Availability
Model	Series	A	L	M	S1	S2	
FCG	1B	12	43	32	10	9	○
FCG	4B	25	75	57	21	20	○
FCG	5B	35	103	78	31	30	○

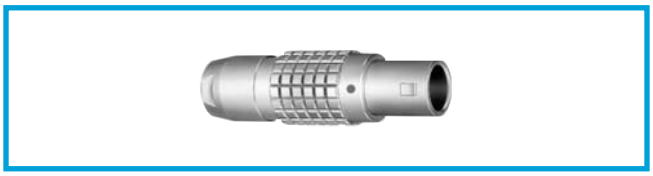

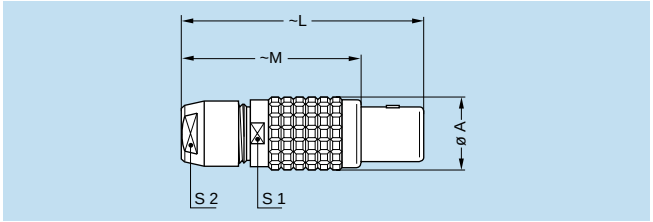

FFG Straight plug, non-latching, key (G) or keys (A…M), cable collet

Reference		Dimensions (mm)					Availability
Model	Series	A	L	M	S1	S2	
FFG	0B	9.5	36	26	8	7	●
FFG	1B	12.0	43	32	10	9	○
FFG	2B	15.0	50	38	13	12	○
FFG	3B	18.0	58	43	15	14	○
FFG	4B	25.0	75	57	21	20	○

● Standard, typically 0-6 weeks delivery for quantities of 250 or less.
○ Non-standard product, contact LEMO USA, typically 6-12 weeks delivery for quantities of 250 or less.
Non-standard product is defined as any product which contains one or more components which are not standard.

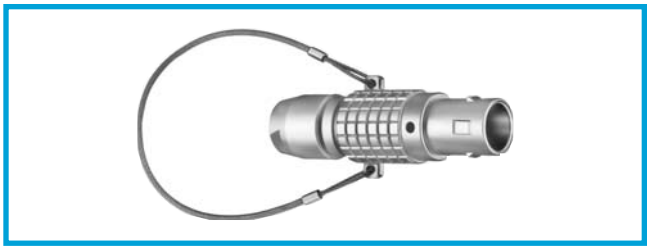

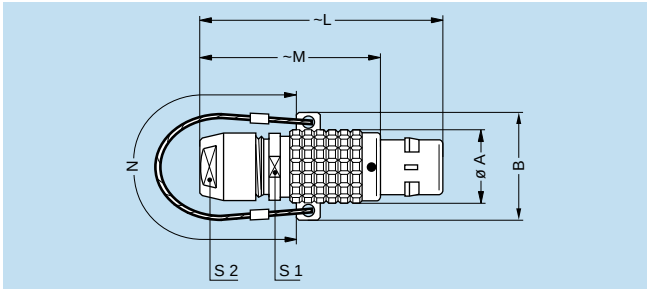

FNG Straight plug, key (G) or keys (A…M and R), cable collet and lanyard release

Reference		Dimensions (mm)							Avail-ability
Model	Series	A	B	L	M	N	S1	S2	
FNG	0B	9.5	15.5	28.5	20.5	140	8	7	○
FNG	1B	12.0	18.0	43.0	32.0	140	10	9	●
FNG	2B	15.0	21.0	49.0	37.0	160	13	12	○
FNG	3B	18.0	25.0	58.0	43.0	190	15	14	○
FNG	4B	25.0	35.2	75.0	57.0	230	21	20	○
FNG	5B	35.0	47.0	103.0	78.0	300	31	30	○

Note: Cable material: stainless steel with PVC sheath.
In 4B and 5B series the outer shell is similar to the PNG model.

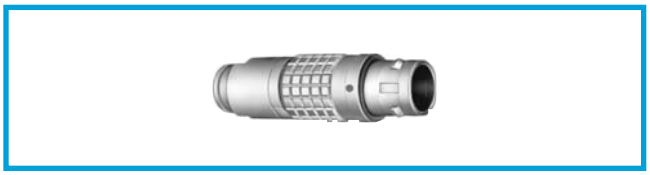

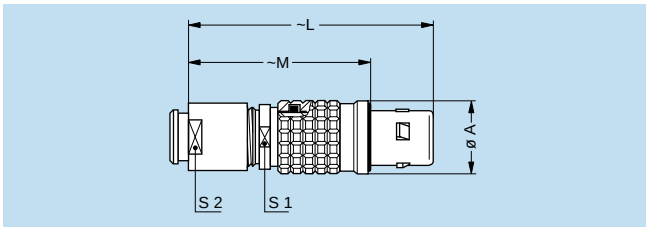

FEG Straight plug, key (G) or keys (A…L), cable collet, front seal and nut for fitting a bend relief

(IP 54 protection index when mated)

Reference		Dimensions (mm)					Availability
Model	Series	A	L	M	S1	S2	
FEG	1B	13.5	42.0	33.0	10	9	○
FEG	2B	16.5	48.0	36.0	13	12	○
FEG	3B	19.0	56.5	41.5	15	15	○

Note: The bend relief must be ordered separately (see page 137).

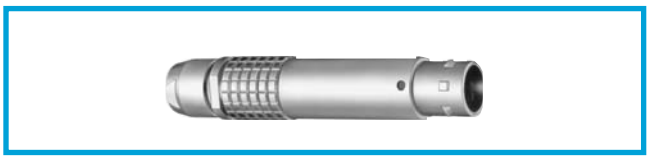

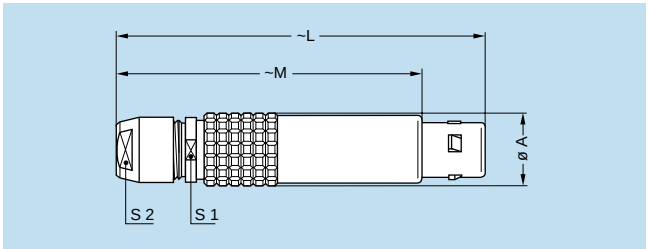

FDG Straight plug, long version, key (G) or keys (A…L), cable collet

Reference		Dimensions (mm)					Availability
Model	Series	A	L	M	S1	S2	
FDG	1B	12	68	57	10	9	○
FDG	2B	15	79	67	13	12	○

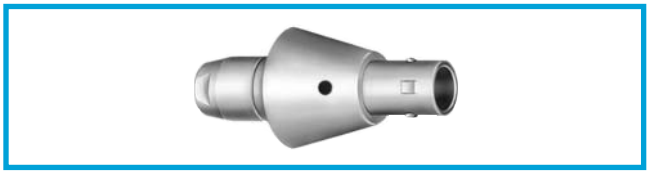

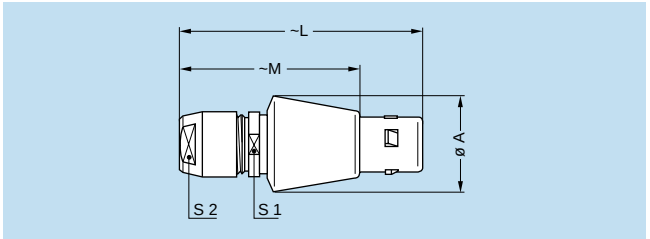

FYG Straight plug, conical shell, key (G) or keys (A…M), cable collet

Reference		Dimensions (mm)					Availability
Model	Series	A	L	M	S1	S2	
FYG	0B	15.5	36	26	8	7	●

● Standard, typically 0-6 weeks delivery for quantities of 250 or less.
○ Non-standard product, contact LEMO USA, typically 6-12 weeks delivery for quantities of 250 or less.
Non-standard product is defined as any product which contains one or more components which are not standard.

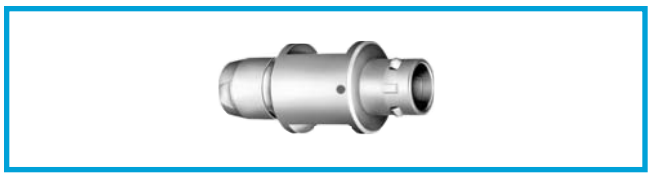

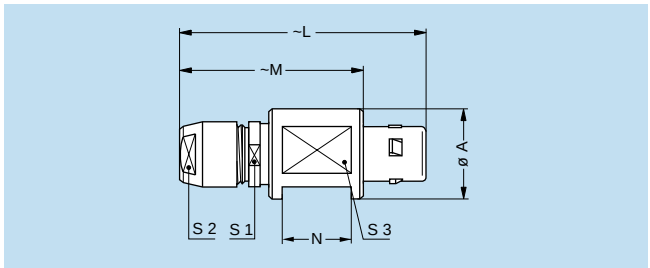

FZG Straight plug for remote handling, key (G) or keys (A…L and R), cable collet

Reference		Dimensions (mm)							Avail-ability
Model	Series	A	L	M	N	S1	S2	S3	
FZG	2B	20	49	37	15	13	12	15	○
FZG	3B	22	58	43	18	15	14	18	○
FZG	4B	30	75	57	25	21	20	25	○
FZG	5B	40	103	78	35	31	30	35	○

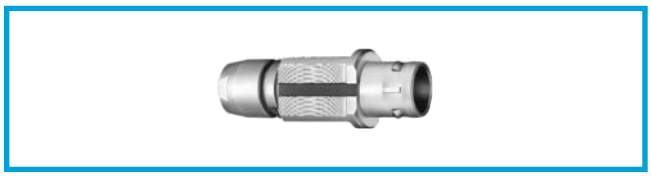

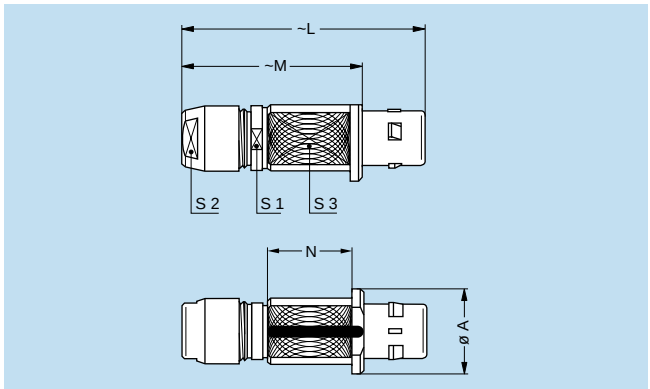

FIG Straight plug for remote handling, key (G) or keys (A…L and R), special alignment mark, knurled handling surface, cable collet

Reference		Dimensions (mm)							Avail-ability
Model	Series	A	L	M	N	S1	S2	S3	
FIG	2B	20	49	37	17.5	13	12	15	○
FIG	3B	22	58	43	21.5	15	14	18	○
FIG	4B	30	75	57	28.5	21	20	25	○
FIG	5B	40	103	78	41.0	31	30	35	○

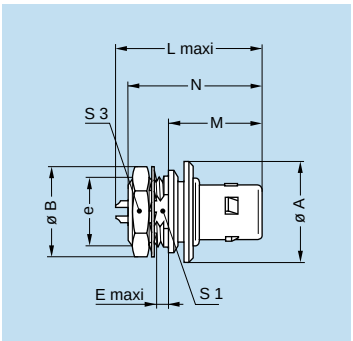

FWG Fixed plug, nut fixing, key (G) or keys (A…L)

Reference		Dimensions (mm)									Avail-ability
Model	Series	A	B	e	E	L	M	N[1)]	S1	S3	
FWG	1B	18.0	16.0	M12x1.0	3.0	24.9	17	24.8	10.5	14	○
FWG	2B	19.5	19.5	M15x1.0	5.2	28.6	18	27.3	13.5	17	○

Panel cut-out: **P9**

Note: 1) Maximum length with crimp contacts

● Standard, typically 0-6 weeks delivery for quantities of 250 or less.
○ Non-standard product, contact LEMO USA, typically 6-12 weeks delivery for quantities of 250 or less.
Non-standard product is defined as any product which contains one or more components which are not standard.

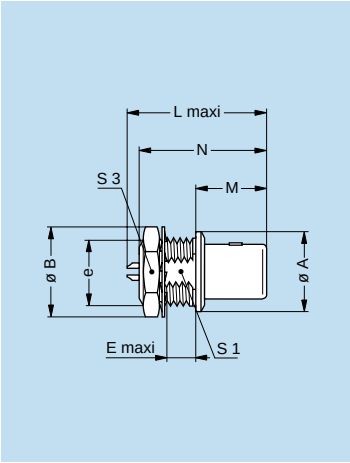

FAG Fixed plug, non-latching, nut fixing, key (G) or keys (A…M and R)

Reference		Dimensions (mm)									Avail-ability
Model	Series	A	B	e	E	L	M	N[1)]	S1	S3	
FAG	00	8	10.3	M7x0.5	2.4	18.1	9.0	15.2	6.3	9	○
FAG	0B	10	12.5	M9x0.6	3.3	20.8	11.2	18.4	8.2	11	○
FAG	1B	14	16.0	M12x1.0	6.5	25.2	12.5	22.6	10.5	14	○
FAG	2B	18	19.5	M15x1.0	5.8	28.7	13.8	25.4	13.5	17	○
FAG	3B	22	25.2	M18x1.0	7.6	32.1	17.0	29.1	16.5	22	○
FAG	4B	28	34.0	M25x1.0	8.1	37.1	20.5	35.1	23.5	30	○
FAG	5B	40	40.0	M35x1.0	7.5	47.1	28.0	43.6	33.5	–	○

Note: 1) Maximum length with crimp contacts. The 5B series is delivered without locking washer or tapered washer and with a round nut.

Panel cut-out: **P1**

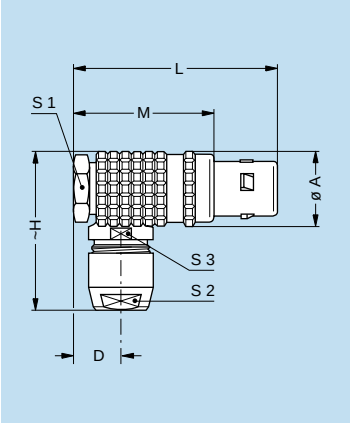

FHG Elbow (90°) plug, key (G) or keys (A…M and R), cable collet

Reference		Dimensions (mm)								Avail-ability
Model	Series	A	D	H	L	M	S1	S2	S3	
FHG	00[1)]	7.7	5.2	18.0	24.5	16.5	7	5	5.5	○
FHG	0B	11.0	6.5	26.0	31.6	21.6	10	7	8.0	●
FHG	1B	13.5	8.0	30.5	37.8	26.3	12	9	10.0	●
FHG	2B	16.5	9.0	34.0	41.5	29.5	14	12	13.0	●
FHG	3B	19.0	10.0	37.0	50.0	35.0	17	14	15.0	○
FHG	4B	26.0	15.0	52.0	67.0	49.0	22	20	21.0	○
FHG	5B	36.0	21.0	74.0	90.0	65.0	32	30	31.0	○

Note: 1) The surface design of the 00 series is different.

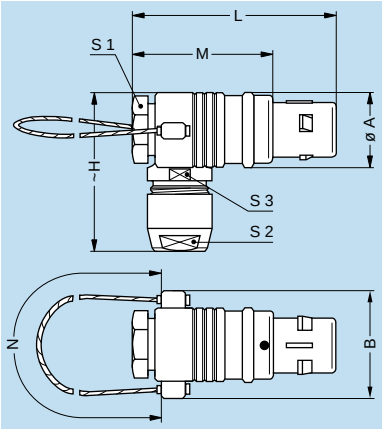

FMG Elbow (90°) plug, key (G) or keys (A…M), cable collet and lanyard release, long key

Reference		Dimensions (mm)									Avail-ability
Model	Series	A	B	H	L	M	N	S1	S2	S3	
FMG	0B	11	17	26	31.6	21.6	140	10	7	8	○

Note: Dimension D is the same as for the FHG model.
Cable material: stainless steel with PVC sheath.
Long key is for the (G) keyway only.

● Standard, typically 0-6 weeks delivery for quantities of 250 or less.
○ Non-standard product, contact LEMO USA, typically 6-12 weeks delivery for quantities of 250 or less.
Non-standard product is defined as any product which contains one or more components which are not standard.

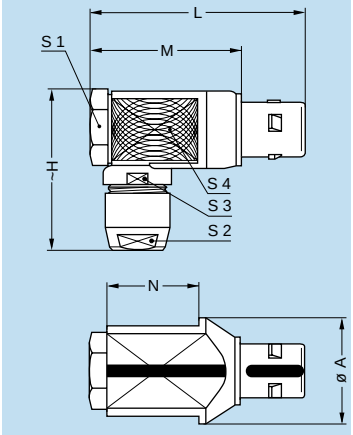

FKG Elbow (90°) plug for remote handling, key (G) or keys (A…L), special alignment mark, knurled handling surface, cable collet

Reference		Dimensions (mm)									Avail-ability
Model	Series	A	H	L	M	N	S1	S2	S3	S4	
FKG	3B	25	37	50	35	21.0	17	14	15	21	○
FKG	4B	51	52	67	49	28.5	22	20	21	28	○

Note: Dimension D is the same as for the FHG model.

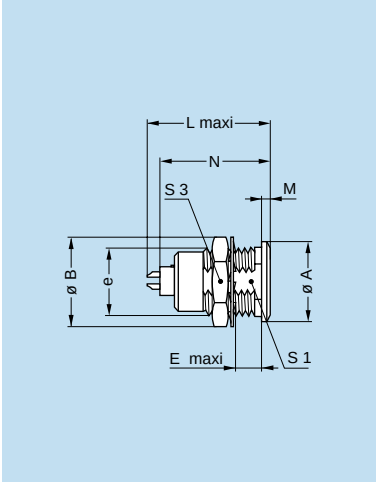

EGG Fixed receptacle, nut fixing, key (G) or keys (A…M and R)

Reference		Dimensions (mm)									Avail-ability
Model	Series	A	B	e	E	L	M	N[1)]	S1	S3	
EGG	00	8	10.3	M7x0.5	6.0	15.5	1.0	13.7	6.3	9	●
EGG	0B	10	12.5	M9x0.6	7.0	20.7	1.2	19.1	8.2	11	●
EGG	1B	14	16.0	M12x1.0	7.5	23.0	1.5	21.1	10.5	14	●
EGG	2B	18	19.5	M15x1.0	8.5	26.7	1.8	24.6	13.5	17	●
EGG	3B	22	25.0	M18x1.0	11.5	30.7	2.0	28.1	16.5	22	○
EGG	4B	28	34.0	M25x1.0	12.0	35.7	2.5	34.1	23.5	30	○
EGG	5B	40	40.0	M35x1.0	11.0	43.5	3.0	39.6	33.5	–	○

Panel cut-out: **P1**

Note: 1) Maximum length with crimp contacts.
The 5B series is delivered with a tapered washer and a round nut.

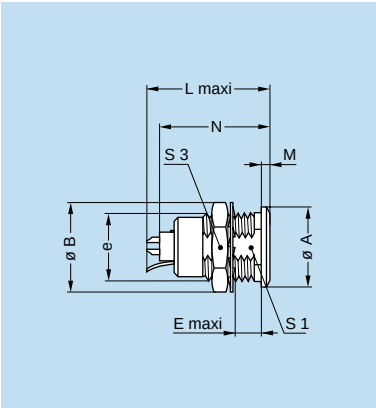

ENG Fixed receptacle with grounding tab, nut fixing, key (G) or keys (A…M)

Reference		Dimensions (mm)									Avail-ability
Model	Series	A	B	e	E	L	M	N[1)]	S1	S3	
ENG	0B	10	12.5	M9x0.6	7.0	20.7	1.2	19.1	8.2	11	○
ENG	1B[2)]	14	16.0	M12x1.0	7.5	23.0	1.5	21.1	10.5	14	○
ENG	2B	18	19.5	M15x1.0	8.5	26.7	1.8	24.6	13.5	17	○
ENG	3B	22	25.0	M18x1.0	11.5	30.7	2.0	28.1	16.5	22	○
ENG	4B	28	34.0	M25x1.0	12.0	35.7	2.5	34.1	23.5	30	○

Panel cut-out: **P1**

Note: 1) Maximum length with crimp contacts.
2) For the 1B series the grounding tab is on the upper side.

● Standard, typically 0-6 weeks delivery for quantities of 250 or less.
○ Non-standard product, contact LEMO USA, typically 6-12 weeks delivery for quantities of 250 or less.
Non-standard product is defined as any product which contains one or more components which are not standard.

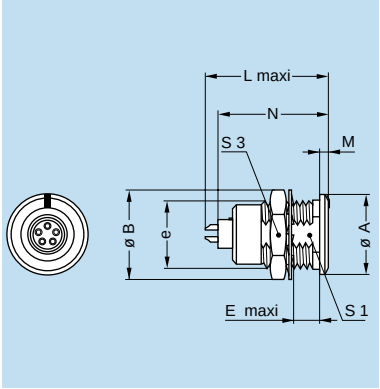

EKG Fixed receptacle, nut fixing, key (G) or keys (A…L and R), special alignment mark on the front

Reference		Dimensions (mm)									Avail-ability
Model	Series	A	B	e	E	L	M	N[1)]	S1	S3	
EKG	2B	18	19.5	M15x1.0	8.5	26.7	1.8	24.6	13.5	17	○
EKG	3B	22	25.0	M18x1.0	11.5	30.7	2.0	28.1	16.5	22	○
EKG	4B	28	34.0	M25x1.0	12.0	35.7	2.5	34.1	23.5	30	○

Panel cut-out: **P1**

Note: 1) Maximum length with crimp contacts.
The 5B series is delivered with a tapered washer and a round nut.

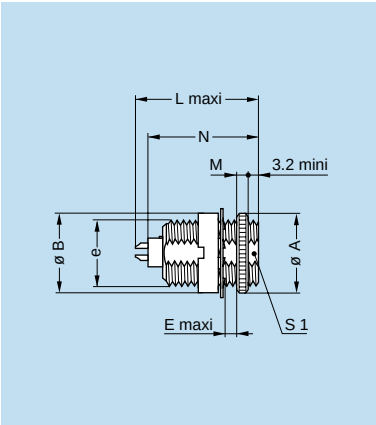

ESG Fixed receptacle with two round nuts, key (G) or keys (A…L), long threaded shell
(back panel mounting)

Reference		Dimensions (mm)								Avail-ability
Model	Series	A	B	e	E	L	M	N[1)]	S1	
ESG	00	9.5	9	M7x0.5	4.0	15.5	2	13.7	–	○
ESG	1B	14.0	14	M12x1.0	8.0	23.0	2	21.1	10.5	○

Panel cut-out: **P1** 1B series Panel cut-out: **P2** 00 series

Note: 1) Maximum length with crimp contacts.

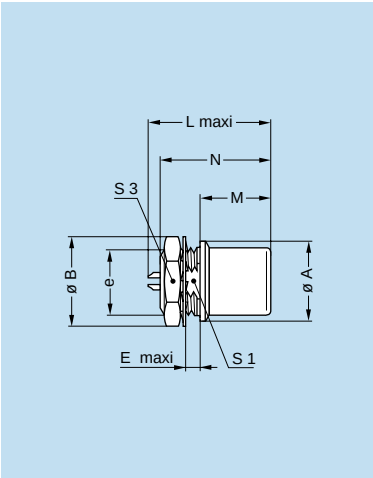

EHG Fixed receptacle, nut fixing, key (G) or keys (A…M and R), and protruding shell

Reference		Dimensions (mm)									Avail-ability
Model	Series	A	B	e	E	L	M	N[1)]	S1	S3	
EHG	00	8.0	10.3	M7x0.5	2.0	15.5	8.5	13.7	6.3	9	○
EHG	0B	10.0	12.5	M9x0.6	2.5	19.5	12.5	19.1	8.2	11	○
EHG	1B	14.0	16.0	M12x1.0	4.2	21.7	12.0	21.1	10.5	14	○
EHG	2B	18.0	19.5	M15x1.0	5.2	22.7	12.5	24.6	13.5	17	○
EHG	3B	22.0	25.0	M18x1.0	4.2	30.7	12.5	28.1	16.5	22	○
EHG	5B	40.0	40.0	M35x1.0	2.5	43.5	28.5	39.6	33.5	–	○

Panel cut-out: **P1**

Note: 1) Maximum length with crimp contacts.
The 5B series is delivered without locking washer or tapered washer and with a round nut.

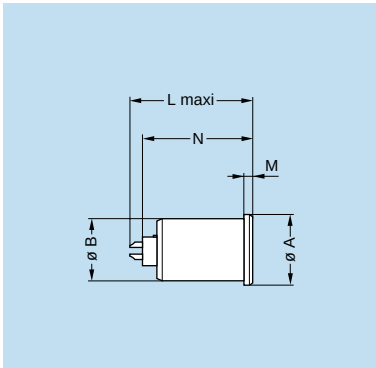

EJG Fixed receptacle, press or adhesive fit, key (G) or keys (A…M)

Reference		Dimensions (mm)					Availability
Model	Series	A	B	L	M	N[1)]	
EJG	0B	9.2	8.35	20.7	1.5	19.1	○
EJG	1B	12.5	11.20	23.0	1.5	21.1	○
EJG	2B	16.5	14.00	26.7	1.5	24.6	○

Panel cut-out: **P5**

Note: 1) Maximum length with crimp contacts.

Data Subject to Change

● Standard, typically 0-6 weeks delivery for quantities of 250 or less.
○ Non-standard product, contact LEMO USA, typically 6-12 weeks delivery for quantities of 250 or less.
Non-standard product is defined as any product which contains one or more components which are not standard.

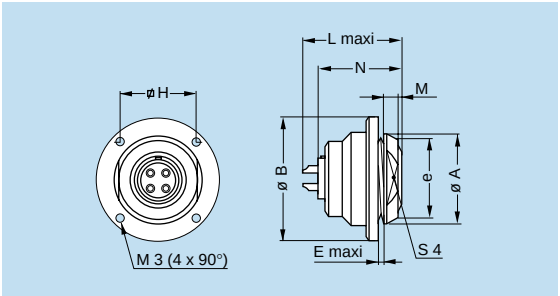

EBG Fixed receptacle, nut fixing, round flange, key (G) or keys (A…L and R), screw fixing
(back panel mounting)

Reference		Dimensions (mm)									Avail-ability
Model	Series	A	B	e	E	H	L	M	N[1)]	S4	
EBG	5B	41	54	M35x1.0	4.0	34	43.5	5.0	39.6	37	○

Panel cut-out: **P6**

Note: [1)] Maximum length with crimp contacts.

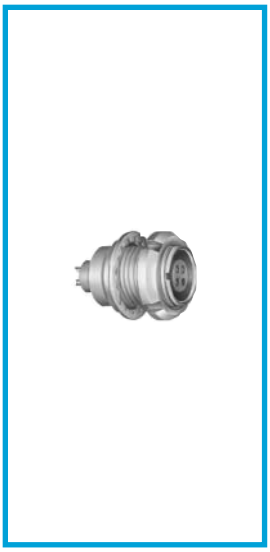

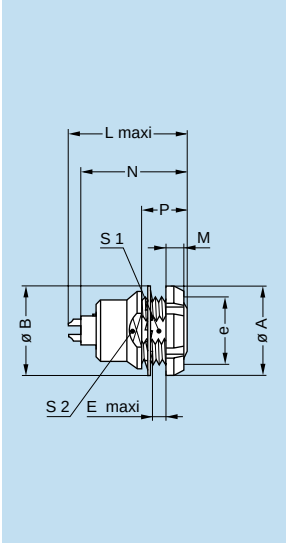

EEG Fixed receptacle, nut fixing, key (G) or keys (A…M and R)
(back panel mounting)

Reference		Dimensions (mm)										Avail-ability
Model	Series	A	B	e	E	L	M	N[1)]	P	S1	S2	
EEG	00	10	9.5	M7x0.5	2.3	15.5	2.5	13.7	6.0	6.3	7.5	○
EEG	0B	12	12.5	M9x0.6	2.4	20.7	2.5	19.1	6.3	8.2	9.0	○
EEG	1B	16	16.0	M12x1.0	6.5	23.0	3.5	21.1	11.0	10.5	13.0	○
EEG	2B	20	20.0	M15x1.0	3.0	26.7	3.5	24.6	9.0	13.5	15.0	○
EEG	3B	24	25.0	M18x1.0	5.0	30.7	4.5	28.1	12.0	16.5	20.0	○
EEG	5B	41	40.0	M35x1.0	13.5	43.5	5.0	39.6	19.5	33.5	38.0	○

Panel cut-out: **P1**

Note: [1)] Maximum length with crimp contacts.
The 3B and 5B series are delivered with a conical nut.
The 5B series is delivered without locking washer or tapered washer.

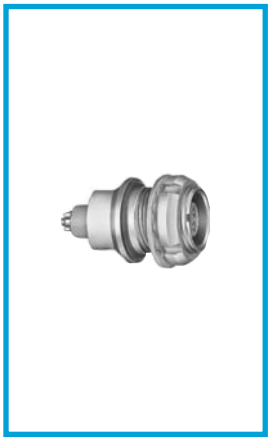

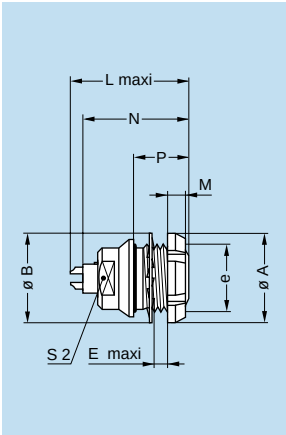

EFG Fixed receptacle, nut fixing, key (G) or keys (A…M), with two flats on the shell and O-ring
(back panel mounting)

Reference		Dimensions (mm)									Avail-ability
Model	Series	A	B	e	E	L	M	N[1)]	P	S2	
EFG	0B	12	12.5	M9x0.6	5.5	20.7	2.5	19.1	9	8	○

Panel cut-out: **P2**

Note: [1)] Maximum length with crimp contacts.

● Standard, typically 0-6 weeks delivery for quantities of 250 or less.
○ Non-standard product, contact LEMO USA, typically 6-12 weeks delivery for quantities of 250 or less.
Non-standard product is defined as any product which contains one or more components which are not standard.

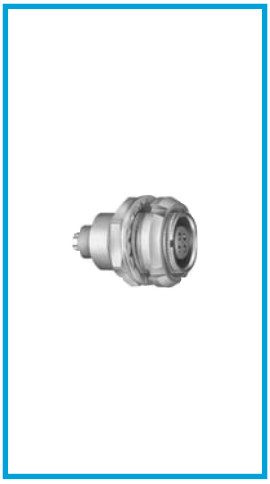

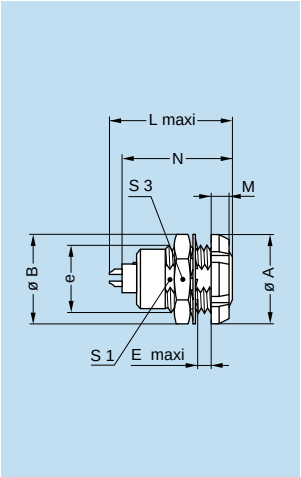

ECG Fixed receptacle with two nuts, key (G) or keys (A…M and R) (back panel mounting)

Reference		Dimensions (mm)									Avail-ability
Model	Series	A	B	e	E	L	M	N[1)]	S1	S3	
ECG	0B	12	12.5	M9x0.6	5.5	20.7	2.5	19.1	8.2	11	●
ECG	1B	16	16.0	M12x1.0	6.0	23.0	3.5	21.1	10.5	14	●
ECG	2B	20	20.0	M15x1.0	6.5	26.7	3.5	24.6	13.5	17	○
ECG	3B	24	25.0	M18x1.0	9.0	30.7	4.5	28.1	16.5	22	○
ECG	4B	30	32.0	M25x1.0	10.0	35.7	4.5	32.6	23.5	30	○
ECG	5B	41	40.0	M35x1.0	9.0	43.5	5.0	39.6	33.5	–	○

Panel cut-out: **P1**

Note: 1) Maximum length with crimp contacts.
The 3B, 4B and 5B series are delivered with a conical nut.
The 5B series is delivered with a tapered washer and a round nut.

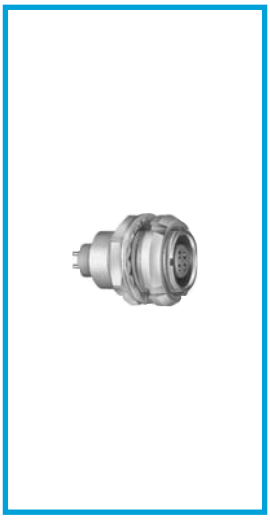

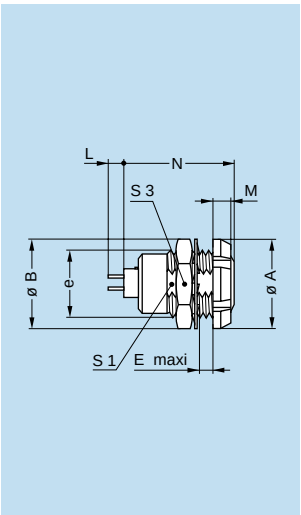

ECG Fixed receptacle with two nuts, key (G) or keys (A…F and R) and straight contact for printed circuit (back panel mounting)

Reference		Dimensions (mm)								Avail-ability
Model	Series	A	B	e	E	M	N	S1	S3	
ECG	0B	12	12.5	M9x0.6	5.5	2.5	16.4	8.2	11	●
ECG	1B	16	16.0	M12x1.0	6.0	3.5	19.8	10.5	14	●
ECG	2B	20	20.0	M15x1.0	6.5	3.5	21.8	13.5	17	○
ECG	3B	24	25.0	M18x1.0	9.0	4.5	25.8	16.5	22	○
ECG	4B	30	32.0	M25x1.0	10.0	4.5	29.8	23.5	30	○
ECG	5B	41	40.0	M35x1.0	9.0	5.0	36.8	33.5	–	○

Panel cut-out: **P1** PCB drilling pattern: **P15**

Note: This contact type is available for E●● receptacle models fitted with female contacts. Length «L» depends on the number of contacts, see table on page 153.
The 5B series is delivered with a tapered washer and a round nut.
The 3B, 4B and 5B series are delivered with a conical nut.

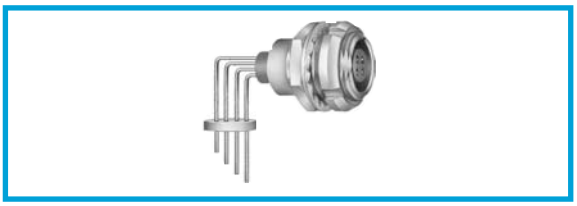

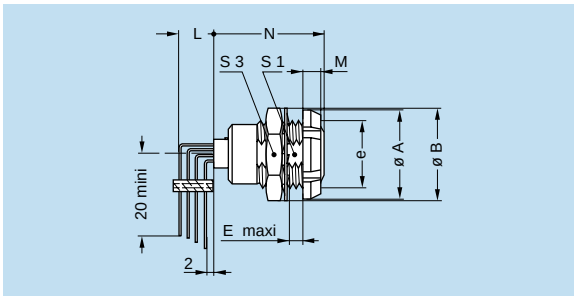

ECG Fixed receptacle with two nuts, key (G) or keys (A…F) with elbow (90°) contact for printed circuit (back panel mounting)

Reference		Dimensions (mm)								Avail-ability
Model	Series	A	B	e	E	M	N max	S1	S3	
ECG	0B	12	12.5	M9x0.6	2.4	2.5	18.3	8.2	11	○
ECG	1B	16	16.0	M12x1.0	6.0	3.5	20.3	10.5	14	○
ECG	2B	20	20.0	M15x1.0	6.5	3.5	22.3	13.5	17	○
ECG	3B	24	25.0	M18x1.0	9.0	4.5	25.8	16.5	22	○

Panel cut-out: **P1** PCB drilling pattern: **P17**

Note: This female contact type is available for all back panel mounting receptacle models.
Length «L» depends on the number of contacts, see PCB drilling pattern on page 153.
For male contacts, receptacles are available upon request, with J, K or L keys.
The 3B series is delivered with a conical nut.

● Standard, typically 0-6 weeks delivery for quantities of 250 or less.
○ Non-standard product, contact LEMO USA, typically 6-12 weeks delivery for quantities of 250 or less.
Non-standard product is defined as any product which contains one or more components which are not standard.

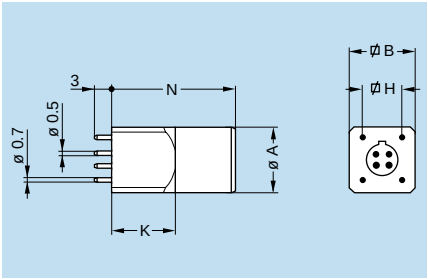

EZG Straight receptacle for printed circuit, key (G) or keys (A, B)

Reference		Dimensions (mm)					Availability
Model	Series	A	B	H	K	N	
EZG	00	6.8	7	5.08	7	14	○

PCB drilling pattern: P15 + P16

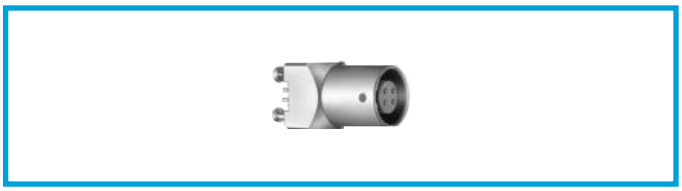

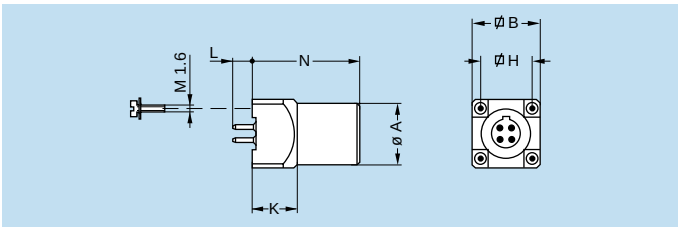

EZG Straight receptacle for printed circuit, key (G) or keys (A…F)

Reference		Dimensions (mm)					Availability
Model	Series	A	B	H	K	N	
EZG	0B	9	10	7.62	8	15.0	○
EZG	1B	11	12	7.62	8	19.0	○
EZG	2B	14	15	10.16	9	22.5	○

PCB drilling pattern: P15 + P16

Note:
Length «L» depends on the number of contacts; see table on page 153.

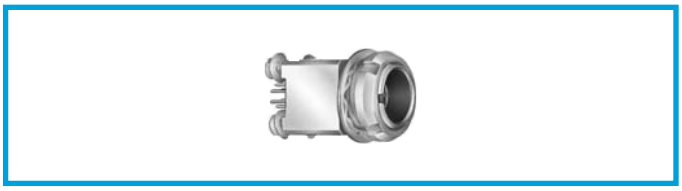

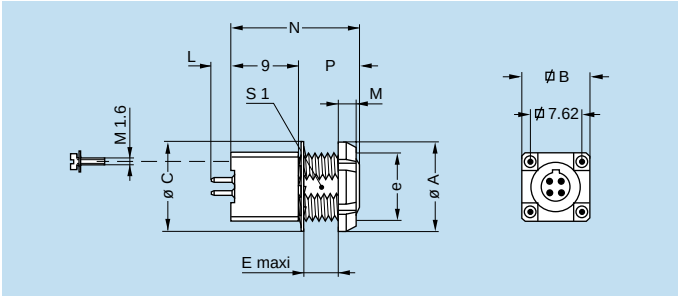

EYG Fixed receptacle for printed circuit, nut fixing, key (G) or keys (A…F)
(back panel mounting)

Reference		Dimensions (mm)									Avail-ability
Model	Series	A	B	C	e	E	M	N	P	S1	
EYG	0B	12	10	12.5	M9x0.6	2.6	2.5	15	6	8.2	○
EYG	1B	14	12	16.0	M11x0.5	5.0	3.5	19	10	–	○

Panel cut-out: P1 0B series Panel cut-out: P10 1B series

PCB drilling pattern: P15 + P16

Note:
Length «L» depends on the number of contacts; see table on page 153.

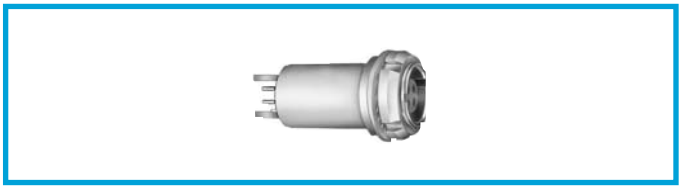

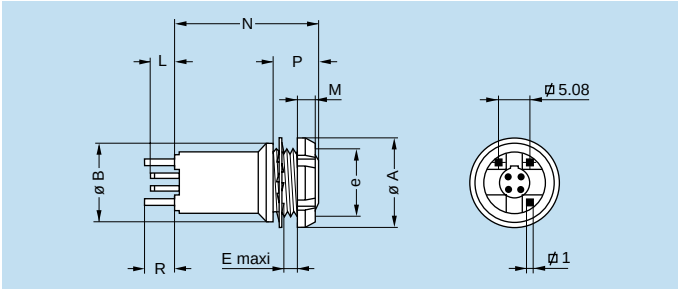

XPF Fixed receptacle, nut fixing, long shell, keys (F) for printed circuit
(back panel mounting)

Reference		Dimensions (mm)								Availability
Model	Series	A	B	e	E	M	N	P	R	
XPF	0B	12	11	M9x0.6	1.5	2.5	19	5	4	○

Panel cut-out: P2

PCB drilling pattern: P15 + P16

Note:
Length «L» depends on the number of contacts; see table on page 153.

● Standard, typically 0-6 weeks delivery for quantities of 250 or less.
○ Non-standard product, contact LEMO USA, typically 6-12 weeks delivery for quantities of 250 or less.
Non-standard product is defined as any product which contains one or more components which are not standard.

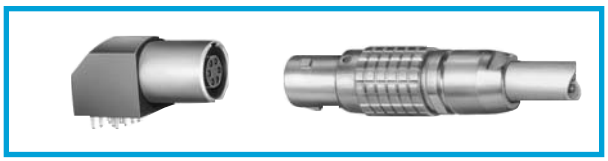

Elbow (90°) receptacles for printed circuit

These receptacle models are fixed onto the printed circuit either by soldering the four pins, or with four screws (M1.6) replacing the pins.

EXG receptacles are two nut fixing and are recommended in cases where a flexible printed circuit is used.

Technical Characteristics

Types

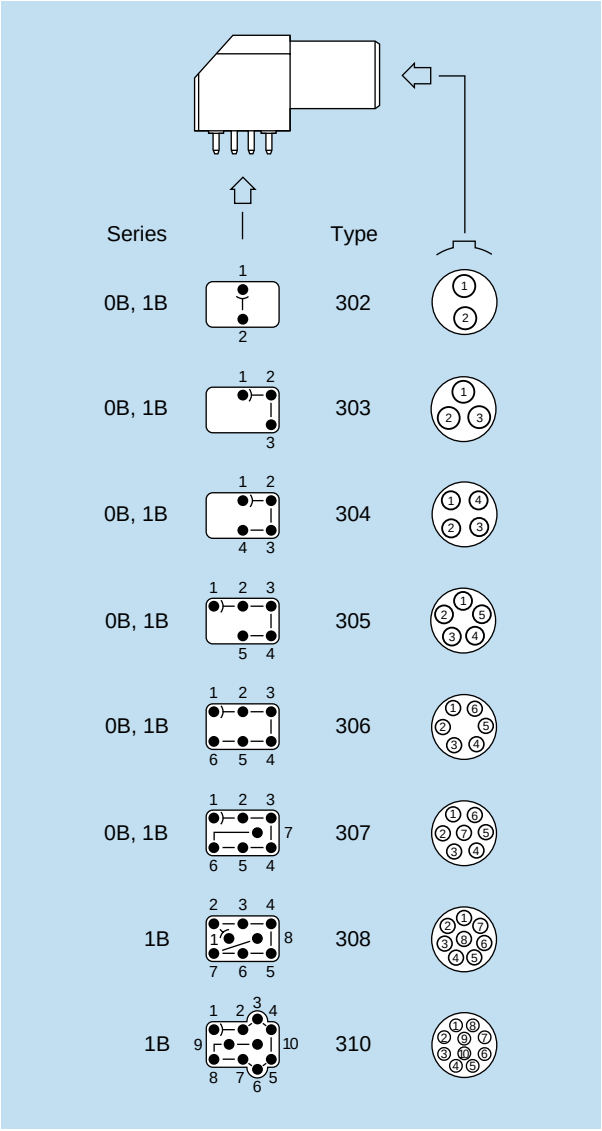

Materials and Treatment

Component	Material	Surface treat. (µm)		
		Cu	Ni	Au
Housing	PPS 1)	–		
	Brass	0.5	3	–
Metallic parts	Brass	0.5	3	–
Grounding crown	Bronze	0.5	3	–
Insulator	PEEK	–		
Female contact	Bronze	0.5	3	1.5

Note: 1) Not used for all sizes.
The surface treatment standards are as follows:
Nickel: FS QQ-N-290A; Gold: ISO 4523.

Electrical

Model	Series	Types	Test voltage (kV rms)1) Contact-contact	Test voltage (kV rms)1) Contact-shell	Rated current (A)
EPG-XBG	00	302-303-304	1.00	1.00	2.0
EPG-EXG	0B	302	1.45	1.20	4.5
EPG-EXG	0B	303	1.70	1.60	4.5
EPG-EXG	0B	304	1.30	1.10	4.5
EPG-EXG	0B	305	1.25	1.20	4.5
EPG-EXG	0B	306	1.25	1.20	2.5
EPG-EXG	0B	307	1.00	1.00	2.0
EPG-EXG	1B	302	1.70	1.45	4.5
EPG-EXG	1B	303	1.60	1.85	4.5
EPG-EXG	1B	304	1.70	1.80	4.5
EPG-EXG	1B	305	1.30	1.55	4.5
EPG-EXG	1B	306	1.35	1.45	4.5
EPG-EXG	1B	307	1.45	1.45	2.0
EPG-EXG	1B	308	1.30	1.30	2.0
EPG-EXG	1B	310	1.00	1.00	1.5
EPG	1B	314	1.00	1.30	1.0

Note: 1) See calculation method, caution and suggested standard on page 10.

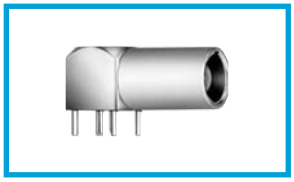

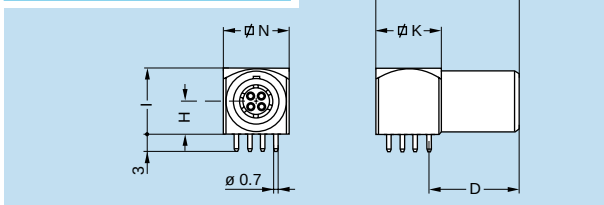

EPG Elbow (90°) receptacle for printed circuit, key (G) or keys (A, B)

Reference	Dimensions (mm)							Availability
	A	D	H	I	K	L	N	
EPG.00.302.NLN	6.8	11	3.5	7	7	17.5	7	●
EPG.00.303.NLN								○
EPG.00.304.NLN								●

PCB drilling pattern: **P18**

● Standard, typically 0-6 weeks delivery for quantities of 250 or less.
○ Non-standard product, contact LEMO USA, typically 6-12 weeks delivery for quantities of 250 or less.
Non-standard product is defined as any product which contains one or more components which are not standard.

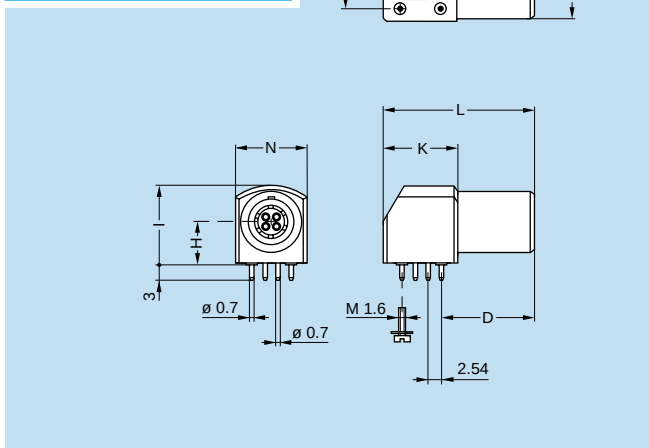

EPG Elbow (90°) receptacle for printed circuit, key (G) or keys (A…F) (solder or screw fixing)

Reference	Dimensions (mm)							Availability
	A	D	H	I	K	L	N	
EPG.0B.302.HLN	9	14.6	6.9	12.7	13.2	25	11.6	●
EPG.0B.303.HLN								●
EPG.0B.304.HLN								●
EPG.0B.305.HLN								●
EPG.0B.306.HLN								○
EPG.0B.307.HLN								●
EPG.1B.302.HLN	11	16.5	7.7	14.0	13.2	27	12.6	○
EPG.1B.303.HLN								○
EPG.1B.304.HLN								●
EPG.1B.305.HLN								●
EPG.1B.306.HLN								●
EPG.1B.307.HLN								●
EPG.1B.308.HLN								●
EPG.1B.310.HLN								●

PCB drilling pattern: **P19**

Note: To replace the four ground pins by four screws (M1.6) add an «S» to the end of the part number. (e.g.: EPG.0B.307.HLNS)

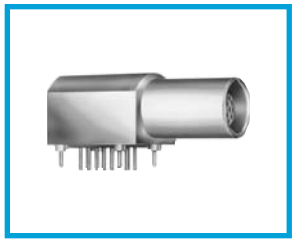

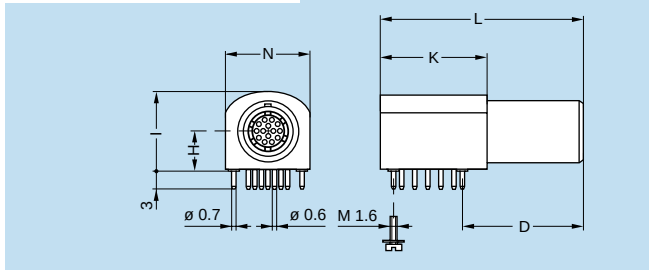

EPG Elbow (90°) receptacle for printed circuit, key (G) or keys (A…F) (solder or screw fixing)

Reference	Dimensions (mm)							Availability
	A	D	H	I	K	L	N	
EPG.1B.314.NLN	11	21	7.7	14.3	19	36	15.4	●

PCB drilling pattern: **P20**

Note: To replace the four ground pins by four screws (M1.6) add an «S» to the end of the part number. (e.g.: EPG.1B.314.NLNS)

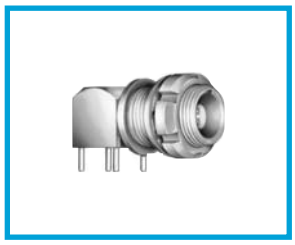

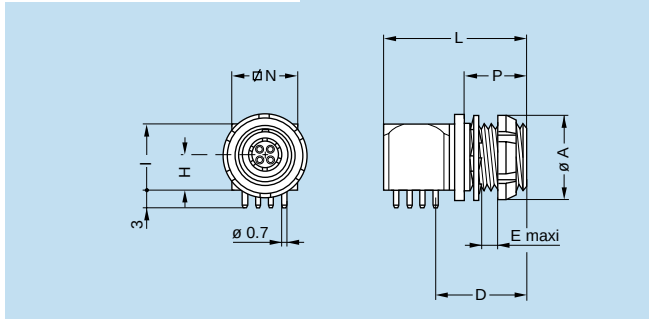

XBG Elbow (90°) receptacle fixing nut for printed circuit, key (G) or keys (A, B) (back panel mounting)

Reference	Dimensions (mm)											Avail-ability
	A	D	e	E	H	I	K	L	M	N	P	
XBG.00.302.NLN	10	11.5	7x0.5	1.8	3.5	7	7	17.5	2.5	7	9	○
XBG.00.303.NLN												○
XBG.00.304.NLN												○

Panel cut-out: **P2**

PCB drilling pattern: **P18**

● Standard, typically 0-6 weeks delivery for quantities of 250 or less.
○ Non-standard product, contact LEMO USA, typically 6-12 weeks delivery for quantities of 250 or less.
Non-standard product is defined as any product which contains one or more components which are not standard.

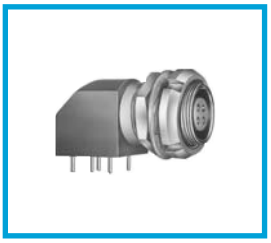

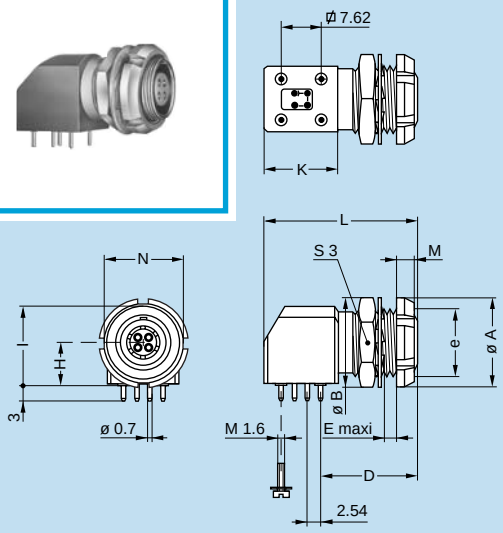

EXG Elbow (90°) receptacle for printed circuit with two nuts, key (G) or keys (A…F) (solder or screw fixing) (back panel mounting)

Reference	Dimensions (mm)												Avail-ability
	A	B	D	e	E	H	I	K	L	M	N	S3	
EXG.0B.302.HLN	12	12.5	14.6	M9x0.6	6.0	6.9	12.7	13.2	25	2.5	10.5	11	●
EXG.0B.303.HLN													●
EXG.0B.304.HLN													○
EXG.0B.305.HLN													●
EXG.0B.306.HLN													○
EXG.0B.307.HLN													○
EXG.1B.302.HLN	14	15.0	16.5	M11x0.5	7.5	7.7	14.0	13.2	27	3.5	14.0	13	○
EXG.1B.303.HLN													●
EXG.1B.304.HLN													●
EXG.1B.305.HLN													●
EXG.1B.306.HLN													○
EXG.1B.307.HLN													●
EXG.1B.308.HLN													●
EXG.1B.310.HLN													○

Panel cut-out: **P2** 0B series Panel cut-out: **P10** 1B series

PCB drilling pattern: **P19**

Note: To replace the four ground pins by four screws (M1.6) add an «S» to the end of the part number. (e.g.: EXG.0B.307.HLNS).

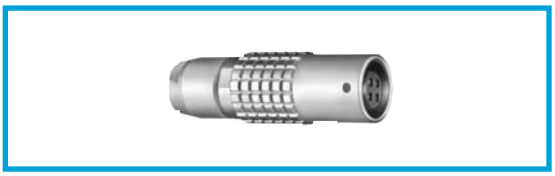

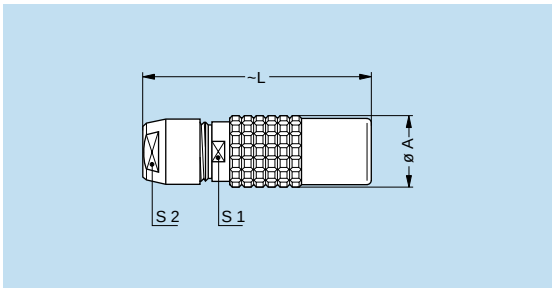

PHG Free receptacle, key (G) or keys (A…M and R), cable collet

Reference		Dimensions (mm)				Availability
Model	Series	A	L	S1	S2	
PHG	00[1)]	6.4	27.0	5.5	5	●
PHG	0B	9.5	35.5	8.0	7	●
PHG	1B	12.5	40.5	10.0	9	●
PHG	2B	16.5	47.0	13.0	12	●
PHG	3B	19.0	56.0	15.0	14	●
PHG	4B	24.4	73.0	21.0	20	○
PHG	5B	34.2	99.0	31.0	30	○

Note: [1)] The surface design of the 00 series is different.

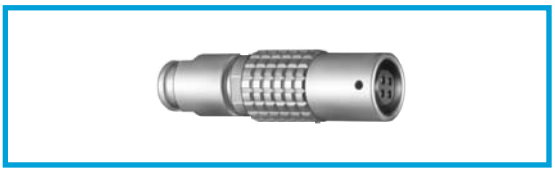

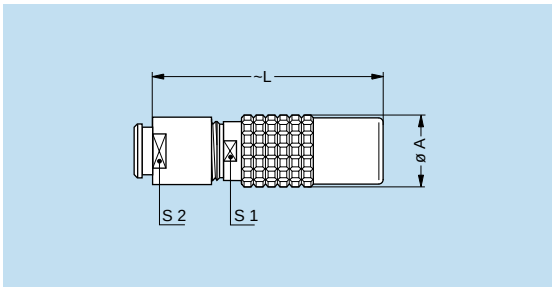

PHG Free receptacle, key (G) or keys (A…M), cable collet and nut for fitting a bend relief

Reference		Dimensions (mm)				Availability
Model	Series	A	L	S1	S2	
PHG	00[1)]	6.4	26.0	5.5	5	●
PHG	0B	9.5	34.5	8.0	7	●
PHG	1B	12.5	39.5	10.0	9	●
PHG	2B	16.5	46.0	13.0	12	●
PHG	3B	19.0	54.5	15.0	15	●
PHG	4B	24.4	69.0	21.0	20	○

Note: [1)] The surface design of the 00 series is different.
The bend relief must be ordered separately (see page 137).

● Standard, typically 0-6 weeks delivery for quantities of 250 or less.
○ Non-standard product, contact LEMO USA, typically 6-12 weeks delivery for quantities of 250 or less.
Non-standard product is defined as any product which contains one or more components which are not standard.

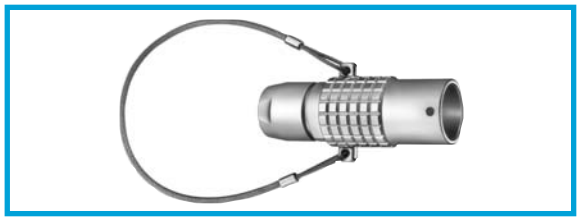

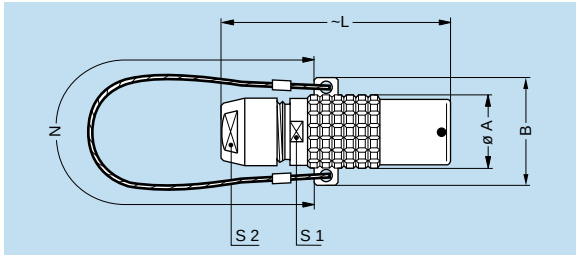

PNG Free receptacle, nut fixing, key (G) or keys (A…L and R), cable collet with lanyard release

Reference		Dimensions (mm)						Availability
Model	Series	A	B	L	N	S1	S2	
PNG	1B	12.5	20.0	40.5	140	10	9	○
PNG	2B	16.5	24.2	47.0	160	13	12	○
PNG	3B	19.0	26.6	56.0	190	15	14	○
PNG	4B	26.0	36.2	73.0	230	21	20	○
PNG	5B	36.0	48.0	99.0	300	31	30	○

Note: Cable material: stainless steel with PVC sheath.

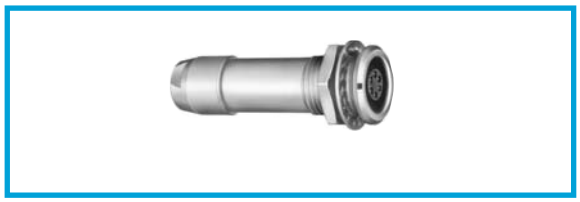

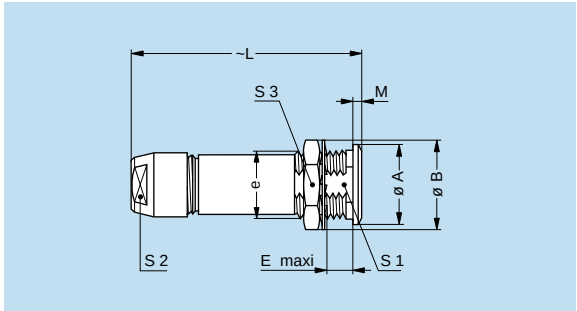

PKG Fixed receptacle, nut fixing, key (G) or keys (A…M and R), cable collet

Reference		Dimensions (mm)									Avail-ability
Model	Series	A	B	e	E	L	M	S1	S2	S3	
PKG	00	8	10.3	M7x0.5	6.5	27.0	1.0	6.3	5	9	○
PKG	0B	10	12.5	M9x0.6	7.0	35.5	1.2	8.2	7	11	○
PKG	1B	14	16.0	M12x1.0	7.5	40.5	1.5	10.5	9	14	○
PKG	2B	18	19.5	M15x1.0	8.5	47.0	1.8	13.5	12	17	○
PKG	3B	22	25.0	M18x1.0	11.5	56.0	2.0	16.5	14	22	○
PKG	4B	28	32.0	M25x1.0	12.0	73.0	2.5	23.5	20	30	○
PKG	5B	40	40.0	M35x1.0	11.0	99.0	3.0	33.5	30	–	○

Panel cut-out: **P1**

Note:
The 5B series is delivered with a tapered washer and a round nut.

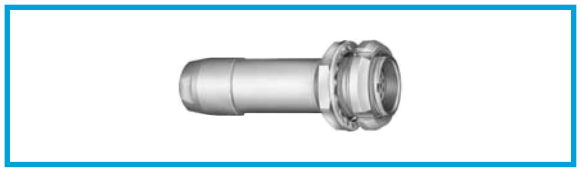

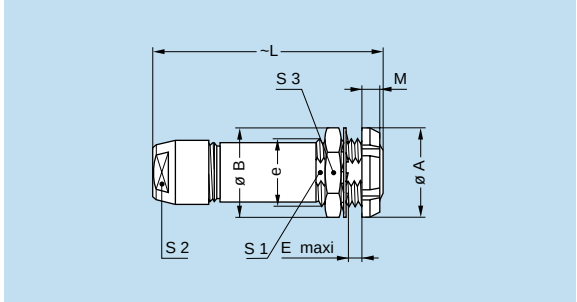

PFG Fixed receptacle, with two nuts, key (G) or keys (A…M and R), cable collet (back panel mounting)

Reference		Dimensions (mm)									Avail-ability
Model	Series	A	B	e	E	L	M	S1	S2	S3	
PFG	00	10	10.3	M7x0.5	5.3	27.0	2.5	6.3	5	9	○
PFG	0B	12	12.5	M9x0.6	5.0	35.5	2.5	8.2	7	11	●
PFG	1B	16	16.0	M12x1.0	5.0	40.5	3.5	10.5	9	14	●
PFG	2B	20	20.0	M15x1.0	6.5	47.0	3.5	13.5	12	17	●
PFG	3B	24	25.0	M18x1.0	9.0	56.0	4.5	16.5	14	22	○
PFG	4B	30	32.0	M25x1.0	11.0	73.0	4.5	23.5	20	30	○
PFG	5B	41	40.0	M35x1.0	10.0	99.0	5.0	33.5	30	–	○

Panel cut-out: **P1**

Note:
The 3B, 4B and 5B series are delivered with a conical nut.
The 5B series is delivered with a tapered washer and a round nut.

● Standard, typically 0-6 weeks delivery for quantities of 250 or less.
○ Non-standard product, contact LEMO USA, typically 6-12 weeks delivery for quantities of 250 or less.
Non-standard product is defined as any product which contains one or more components which are not standard.

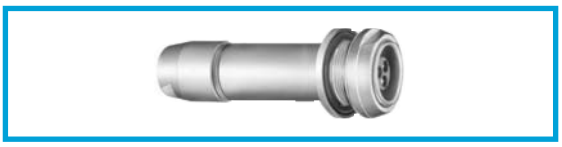

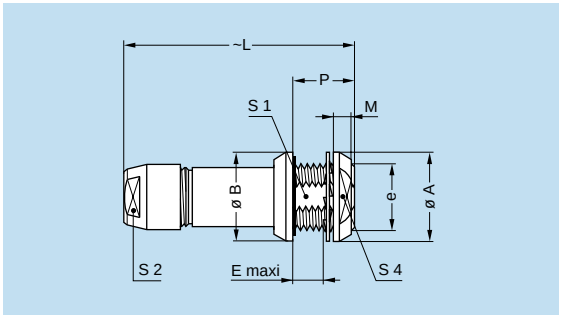

PEG Fixed receptacle, nut fixing, key (G) or keys (A…L), cable collet (back panel mounting)

Reference		Dimensions (mm)										Avail-ability
Model	Series	A	B	e	E	L	M	S1	S2	S4	P	
PEG	3B	24	22	M18x1.0	5.0	56	4.5	16.5	14	20	12	○
PEG	4B	32	34	M25x1.0	12.5	73	5.0	23.5	20	27	20	○

Panel cut-out: **P1**

Note: The 4B series has an o-ring on the flange.

R●● Fixed coupler, nut fixing, key (G) or keys (A and J) at the flange end and keys (J, K or M) at the other end

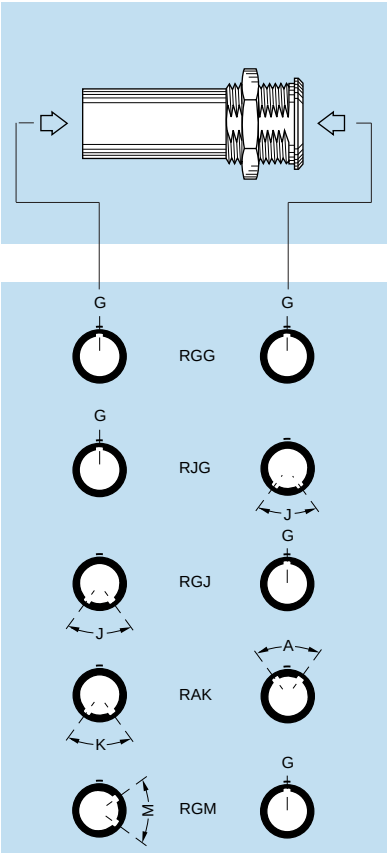

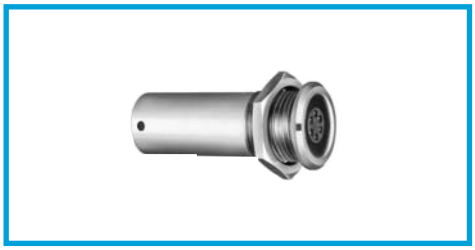

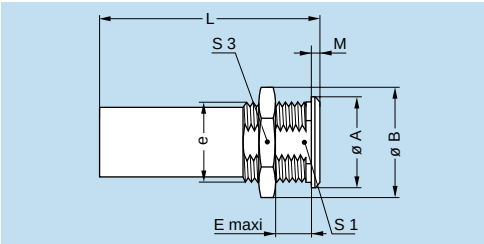

Reference		Contacts	Dimensions (mm)								Availability
Model	Series	Type	A	B	e	E	L	M	S1	S3	
RGG [1)]	0B	female – female	12	13.8	M10x0.75	8.0	34	2.0	9.0	12	○
RGG [2)]	0B	female – female	12	13.8	M10x0.75	8.0	43	2.0	9.0	12	○
RJG	0B	male – female	12	13.8	M10x0.75	8.0	34	2.0	9.0	12	○
RGJ		female – male									○
RAK		female – male									○
RGM		female – male									○
RGG [2)]	1B	female – female	16	19.5	M14x1.00	8.5	47	2.5	12.5	17	○
RJG	1B	male – female	16	19.5	M14x1.00	8.5	39	2.5	12.5	17	○
RGJ		female – male									○
RJG	2B	male – female	20	21.8	M16x1.00	12.0	44	4.0	15.0	19	○
RGJ		female – male									○
RGJ	3B	female – male	25	27.5	M20x1.00	32.0	53	4.0	18.5	24	○
RGJ	4B	female – male	34	32.0	M25x1.00	50.0	65	4.0	23.5	30	○

Note: [1)] Only available with two contacts. [2)] Only available with three contacts.
For this fixed coupler, the first contact type mentioned is always the one at the flange end. On request, these couplers can be produced in other series, with other keys.

Panel cut-out: **P4**

● Standard, typically 0-6 weeks delivery for quantities of 250 or less.
○ Non-standard product, contact LEMO USA, typically 6-12 weeks delivery for quantities of 250 or less.
Non-standard product is defined as any product which contains one or more components which are not standard.

Models with Microswitch

Some receptacles are available fitted with a microswitch. The microswitch is independent from the electrical contacts of the receptacle. The introduction of a plug into the receptacle activates the microswitch.

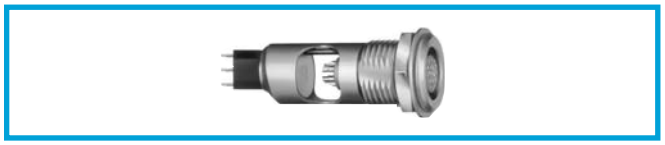

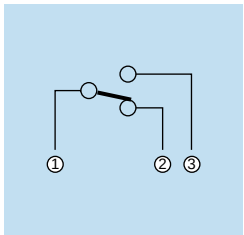

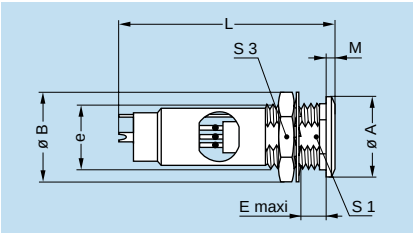

EMG Fixed receptacle, nut fixing, microswitch, key (G) or keys (A…L)

Reference		Dimensions (mm)								Avail-ability
Model	Series	A	B	e	E	L	M	S1	S3	
EMG	0B	10	12.5	M9x0.6	5.5	35	1.2	8.2	11	○
EMG	1B	14	16.0	M12x1.0	7.0	38	1.5	10.5	14	○

Panel cut-out: **P1**

Note: Only available with 2 or 3 contacts (type 302, 303) in 0B series.
Only available with 3 or 6 contacts (type 303, 306) in 1B series.
For the microswitch: maximum operating voltage: 270 Veff/Vdc;
rated current: 8.5A/0.5A.

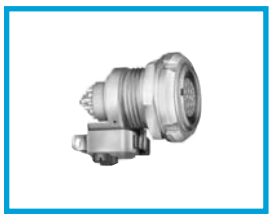

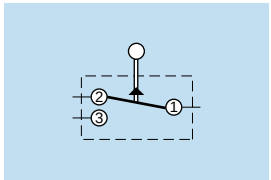

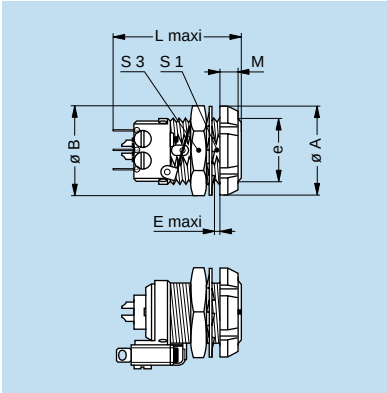

EMG Fixed receptacle, with two nuts, microswitch, key (G) or keys (A…L)

Reference		Dimensions (mm)								Avail-ability
Model	Series	A	B	e	E	L	M	S1	S3	
EMG	2B	20	19.5	M15x1.0	2.2	26.7	3.5	13.5	17	○

Panel cut-out: **P1**

Note: For the microswitch: maximum operating voltage: 250 Veff/Vdc;
rated current: 7A/0.25A.

● Standard, typically 0-6 weeks delivery for quantities of 250 or less.
○ Non-standard product, contact LEMO USA, typically 6-12 weeks delivery for quantities of 250 or less.
Non-standard product is defined as any product which contains one or more components which are not standard.

Bridge Plug

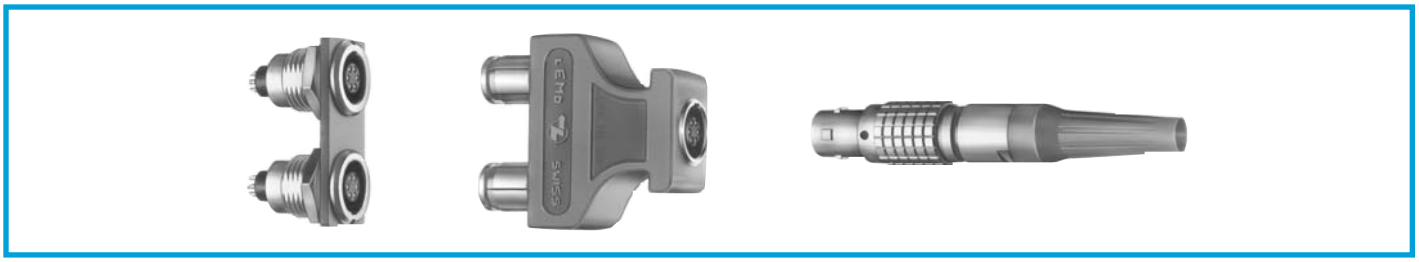

The LEMO audio-video connector system consists of two receptacles, with or without microswitch, a bridge plug with or without output monitoring and a plug with or without bend relief. This system is already widely used in telecommunication equipment and in radio and television broadcasting centers.

The connectors of this system are fully compatible with all other connector models of the same series and type. However, when designing systems, it should be considered that the distance between the assembled nut-fixing models should correspond to that between the outputs of the bridge plug. In order to provide the user with a coding system, the bridge plug housing, the double panel washers and the bend reliefs are available in nine colors.

Technical Characteristics

Mechanical and Climatic

Characteristics	Value	Standard
Endurance	> 1000 cycles	IEC 60512-5 test 9a
Working temperature	maximum 194° F	

Materials and Treatment

Component	Material	Surface treat. (µm)			
		Cu	Ni	Cr	Au
Plastic housing	Polyamide	–			
Metallic parts	Brass	0.5	3	–	–
	Brass	0.5	3	0.3	–
Insulator	PEEK	–			
Male contact	Brass	0.5	3	–	1.0
Female contact	Bronze	0.5	3	–	1.5

Note: The surface treatment standards are as follows:
– Nickel: FS QQ-N-290A
– Chrome: FS QQ-C-320B
– Gold: ISO 4523

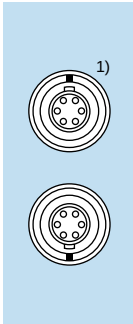

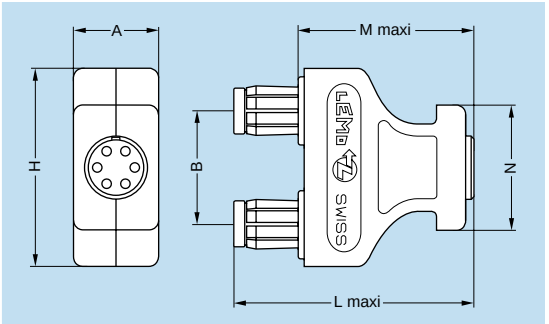

Electrical

Characteristics	Value	Standard
Contact resistance	< 6 mΩ	IEC 60512-2 test 2a

Characteristics	Series	Audio-Mono	Audio-Stereo	Test voltage (kV rms) 1) 2)	Rated current (A)
CFF.0B.302.PLCG	0B	■	–	1.05	4
CRG.0B.302.PLEG	0B	■	–	1.05	4
CFF.0B.303.PLCG	0B	■	–	0.80	4
CRG.0B.303.PLEG	0B	■	–	0.80	4
CRG.0B.306.PLEG	0B	–	■	0.40	2
CFF.1B.303.PLCG	1B	■	–	1.25	5
CRG.1B.303.PLEG	1B	■	–	1.25	5
CFF.1B.306.PLCG	1B	–	■	0.80	3
CRG.1B.306.PLEG	1B	–	■	0.80	3

Note: The last letter of the part number indicates the color of the housing. Ex. G (standard) is grey. To obtain another color, replace this letter by the letter corresponding to the selected color (see table on page 55).
1) **See calculation method, caution and suggested standard on page 11.**
2) Lowest measured value; contact to contact or contact to shell.

CFF Bridge plug with two non-latching plugs

CRG Bridge plug with two non-latching plugs, and monitoring receptacle, key (G) or keys (A…M)

Reference		Dimensions (mm)						Avail-ability
Model	Series	A	B	H	L	M	N	
CFF-CRG	0B	13.5	14	27.5	37.2	27.2	22.5	○
CFF-CRG	1B	15.0	20	35.0	42.0	31.0	22.0	○

Note:
1) Receptacles are to be mounted with the keys mounted on the opposite side.

Data Subject to Change

● Standard, typically 0-6 weeks delivery for quantities of 250 or less.
○ Non-standard product, contact LEMO USA, typically 6-12 weeks delivery for quantities of 250 or less.
Non-standard product is defined as any product which contains one or more components which are not standard.

Plugs with parallel receptacles

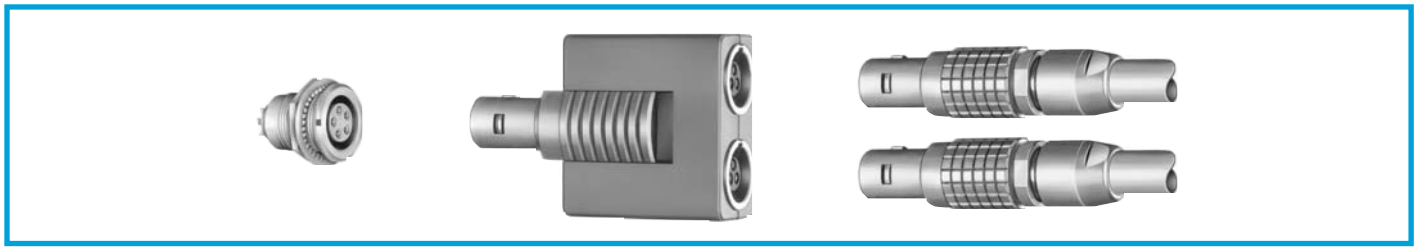

These plug models have been designed to divide one or more signals originating from the same source to two different points. They are used in various fields of application, particularly in audio signal transmission.

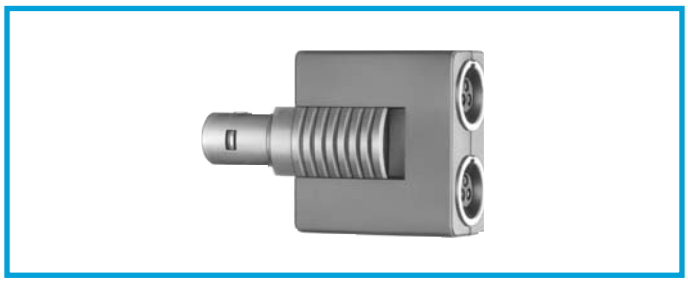

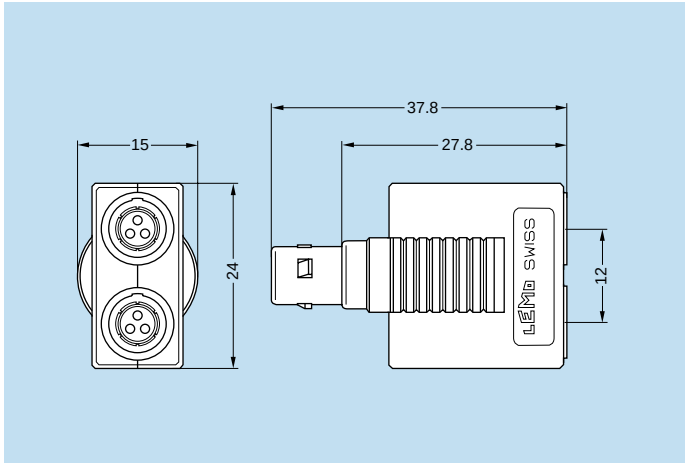

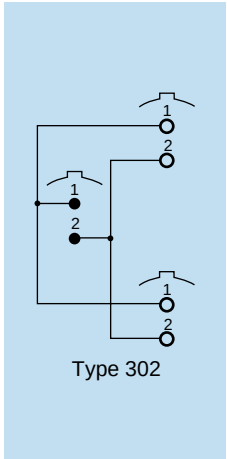

Type 302

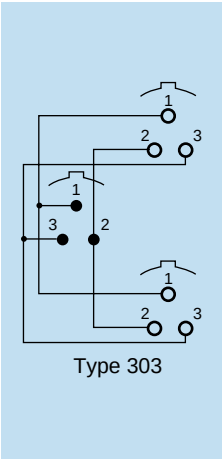

Type 303

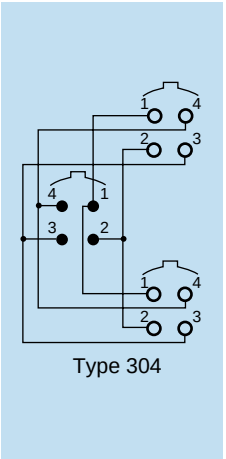

Type 304

FTG Straight plug, key (G) and two parallel receptacles

Reference	Availability
FTG.0B.302.PLFG	○
FTG.0B.303.PLFG	○
FTG.0B.304.PLFG	○

Technical Characteristics

Electrical

Model	Number of contacts	Test voltage (kV rms) 1) 2)	Nominal current (A)
FTG.0B.302.PLFG	2	1.05	4
FTG.0B.303.PLFG	3	0.80	4
FTG.0B.304.PLFG	4	0.80	3

Materials and Treatment

Component	Material	Surface treat. (µm)			
		Cu	Ni	Cr	Au
Plastic housing	Polyamide	–			
Metallic parts	Brass	0.5	3	–	–
	Special brass	0.5	3	0.3	–
Insulator	PEEK	–			
Male contact	Brass	0.5	3	–	1.0
Female contact	Bronze	0.5	3	–	1.5

Note:
1) **See calculation method, caution and suggested standard on page 11.**
2) Lowest measured value; contact to contact or contact to shell.
The surface treatment standards are as follows:
– Nickel: FS QQ-N-290A
– Chrome: FS QQ-C-320B
– Gold: ISO 4523

● Standard, typically 0-6 weeks delivery for quantities of 250 or less.
○ Non-standard product, contact LEMO USA, typically 6-12 weeks delivery for quantities of 250 or less.
Non-standard product is defined as any product which contains one or more components which are not standard.

Plastic Housing Models

FGG, FGY, ENG and ENY plug and receptacle models are available with the outer shell and collet nut made with various insulating materials.

These connectors are particularly recommended for all applications requiring maximum electrical insulation when mated. The design, including a latch sleeve and a metal grounding crown, guarantees EMC screening efficiency to meet most requirements.

Technical Characteristics

Mechanical and Climatic

Characteristics	Value			Standard
	PEEK	PSU	PPSU	
Color	natural (beige)	white or grey	cream	–
Endurance	> 5000 cycles	> 5000 cycles	> 5000 cycles	IEC 60512-5 test 9a
Humidity	up to 95% at 140° F			–
Temperature range	-58° F/+482° F	-58° F/+302° F	-58° F/+356° F	–
Sterilization resistance 1)	> 200 cycles	~20 cycles	> 100 cycles	IEC 60601-1 § 44.7
Resistance to solvents	very good	limited	good	–

Note: 1) Steam sterilization with potting on rear connection

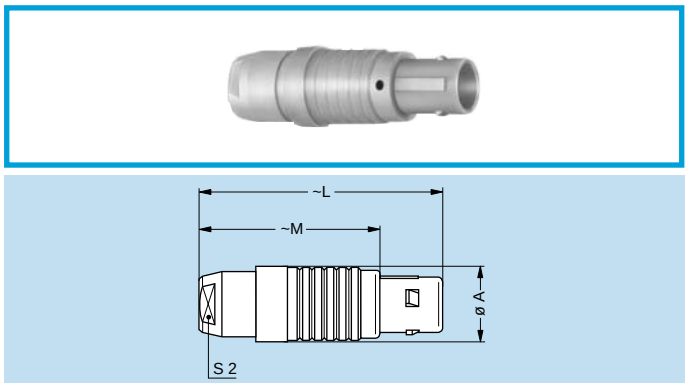

FGG Straight plug, key (G or J), cable collet, PEEK outer shell

Reference		Dimensions (mm)				Availability
Model	Series	A	L	M	S2	
FGG	1B	13.5	43.0	32.0	10	○
FGG	3B	19.0	62.0	47.0	15	○
FGG	4B	26.0	78.5	60.5	20	○

Note: Model also available with a nut for fitting a bend relief.

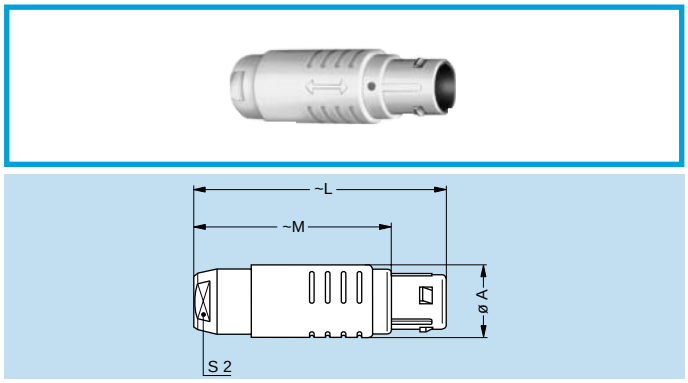

FGY Straight plug, keys (Y), cable collet and PSU or PPSU outer shell

Reference		Dimensions (mm)				Availability
Model	Series	A	L	M	S2	
FGY	2B	16.5	50.5	39.5	13	○
FGY	3B	19.0	58.0	43.0	15	○

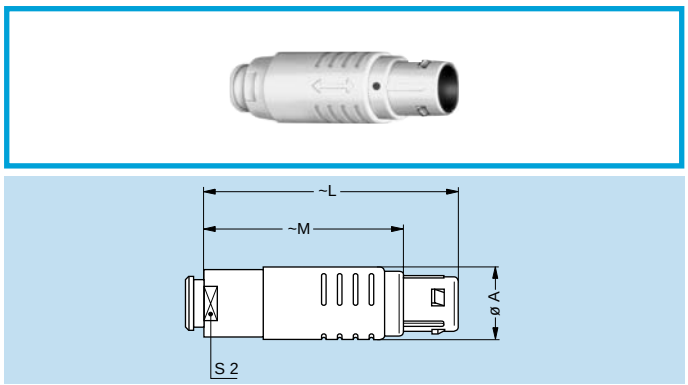

FGY Straight plug, keys (Y), cable collet and PSU or PPSU outer shell and nut for fitting a bend relief

Reference		Dimensions (mm)				Availability
Model	Series	A	L	M	S2	
FGY	2B	16.5	49.5	38.5	13	○
FGY	3B	19.0	56.5	41.5	15	○

Note: The bend relief must be ordered separately (see page 137).

Data Subject to Change

● Standard, typically 0-6 weeks delivery for quantities of 250 or less.
○ Non-standard product, contact LEMO USA, typically 6-12 weeks delivery for quantities of 250 or less.
Non-standard product is defined as any product which contains one or more components which are not standard.

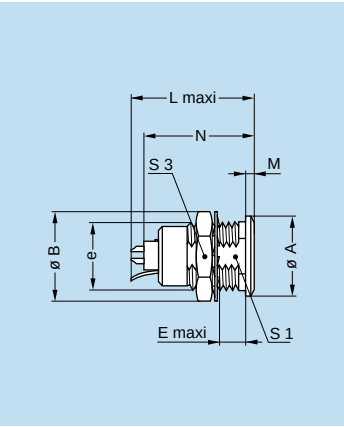

ENG Fixed receptacle with grounding tab, nut fixing, key (G or J), PEEK outer shell

Reference		Dimensions (mm)									Avail-ability
Model	Series	A	B	e	E	L	M	N[1)]	S1	S3	
ENG	1B	14	16.0	M12x1.0	7.5	23.0	1.5	21.1	10.5	14	○
ENG	3B	22	25.0	M18x1.0	11.5	30.7	2.0	28.1	16.5	22	○
ENG	4B	28	32.0	M25x1.0	12.0	35.7	2.5	32.6	23.5	30	○

Panel cut-out: **P1**

Note: 1) Maximum length with crimp contacts.

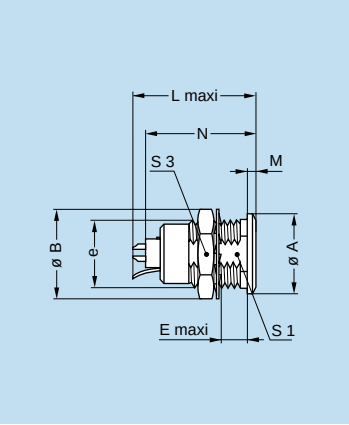

ENY Fixed receptacle with grounding tab, nut fixing, keys (Y), PSU or PPSU outer shell

Reference		Dimensions (mm)									Avail-ability
Model	Series	A	B	e	E	L	M	N[1)]	S1	S3	
ENY	2B	18	19.5	M15x1.0	8.5	26.7	1.8	24.6	13.5	17	○
ENY	3B	22	25.0	M18x1.0	11.5	30.7	2.0	28.1	16.5	22	○

Panel cut-out: **P1**

Note: 1) Maximum length with crimp contacts.

Note: Other models with plastic outer shell are available on request.

● Standard, typically 0-6 weeks delivery for quantities of 250 or less.
○ Non-standard product, contact LEMO USA, typically 6-12 weeks delivery for quantities of 250 or less.
Non-standard product is defined as any product which contains one or more components which are not standard.

Watertight or Vacuum-Tight Models

YHG, HGG, HCG, HNG, HHG, HMG and S●● plug, receptacle or coupler models allow the device on which they are fitted to reach a protection index of IP68 as per IEC 60529. They are fully compatible with plugs of the same series and are widely used for portable radios, military, laboratory equipment, aviation, etc.

These models are identified by a letter «P» at the end of the reference.

Most of these models are also available in a vacuum-tight version. Such models are identified by an additional letter «V» at the end of the part number (certificate on request).

Epoxy resin is used to seal these models.

Part number example:
Watertight receptacle – HGG.1B.306.CLLP
Vacuum-tight receptacle – HGG.1B.306.CLLPV

Technical Characteristics

Mechanical and Climatic

Charateristics		Value	Standard
Endurance		> 5000 cycles	IEC 60512-5 test 9a
Humidity		up to 95% at 140° F	
Temperature range		-4° F/+176° F	
Salt spray corrosion test		> 144h	IEC 60512-6 test 11f
Protection index (mated)		IP 68	IEC 60529
Climatic category		20/80/21	IEC 60068-1
Leakage rate (He)[1)]		< 10^{-7} mbar.l.s^{-1}	IEC 60512-7 test 14b
Maximum operating pressure[2)]	00	60 bars	IEC 60512-7 test 14d
	0B	60 bars	
	1B	60 bars	
	2B	40 bars	
	3B	30 bars	
	4B	15 bars	
	5B	5 bars	

Note:
1) Only for vacuum-tight models.
2) This value corresponds to the maximum allowed pressure difference for the assembled receptacle.

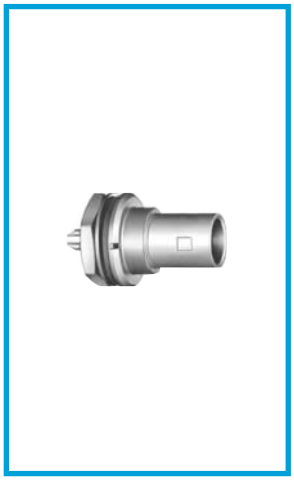

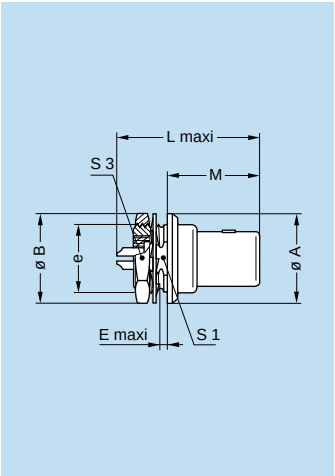

YHG Fixed plug, nut fixing, non-latching, key (G) or keys (A…M)

Reference		Dimensions (mm)								Avail-ability
Model	Series	A	B	e	E	L	M	S1	S3	
YHG	0B	14.0	12.5	M9x0.6	2.9	24.1	14.6	8.2	11	○
YHG	1B	16.0	16.0	M12x1.0	5.1	28.2	16.4	10.2	14	○
YHG	2B	19.5	19.5	M15x1.0	4.7	30.2	18.2	13.5	17	○
YHG	3B	22.0	25.2	M18x1.0	5.8	32.5	22.4	16.5	22	○

Panel cut-out: **P9**

Note: This model does not include an O-ring behind the flange, it ensures only IP61 protection index. Consequently, it is not vacuum-tight. Watertightness (when mated) is only ensured with HHG and HCG receptacles.

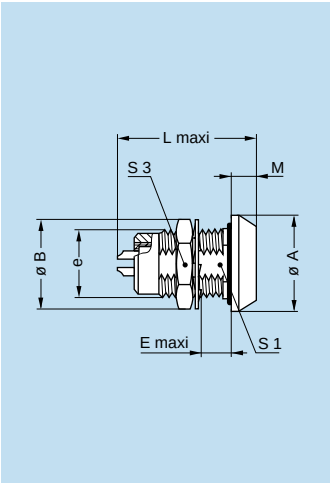

HGG Fixed receptacle, nut fixing, key (G) or keys (A…M and R), watertight or vacuum-tight

Reference		Dimensions (mm)								Avail-ability
Model	Series	A	B	e	E	L	M	S1	S3	
HGG	00	11	10.3	M7x0.5	8.0	18.3	1.5	-	9	○
HGG	0B	13	12.5	M9x0.6	7.0	20.7	3.0	8.2	11	○
HGG	1B	18	16.0	M12x1.0	7.0	26.0	4.5	10.5	14	○
HGG	2B	20	19.5	M15x1.0	8.0	29.7	4.0	13.5	17	○
HGG	3B	25	25.0	M18x1.0	11.5	36.2	4.0	16.5	22	○
HGG	4B	34	34.0	M25x1.0	11.0	44.7	4.0	23.5	30	○
HGG	5B	45	40.0	M35x1.0	11.0	51.7	5.0	33.5	–	○

Panel cut-out: **P9**

Note: The 5B series is delivered with a tapered washer and a round nut.

● Standard, typically 0-6 weeks delivery for quantities of 250 or less.
○ Non-standard product, contact LEMO USA, typically 6-12 weeks delivery for quantities of 250 or less.
Non-standard product is defined as any product which contains one or more components which are not standard.

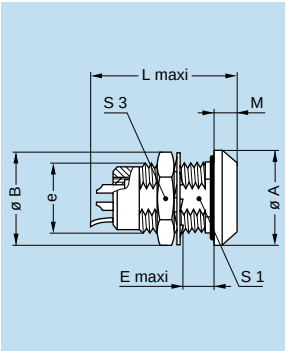

HNG Fixed receptacle, nut fixing, with grounding tab, key (G) or keys (A…M), watertight or vacuum-tight

Reference		Dimensions (mm)								Avail-ability
Model	Series	A	B	e	E	L	M	S1	S3	
HNG	0B	13	12.5	M9x0.6	7	20.7	3	8.2	11	○

Panel cut-out: **P9**

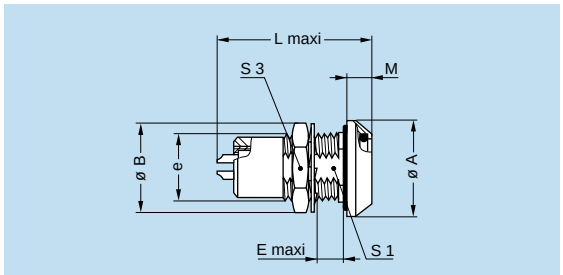

HHG Fixed receptacle, nut fixing, key (G) or keys (A…M), watertight or vacuum-tight (watertight when mated)

Reference		Dimensions (mm)								Avail-ability
Model	Series	A	B	e	E	L	M	S1	S3	
HHG	0B	13	12.5	M9x0.6	7.0	23.7	4.8	8.2	11	○
HHG	1B	18	16.0	M12x1.0	7.0	29.7	5.2	10.5	14	○
HHG	2B	22	19.5	M15x1.0	8.0	33.7	6.0	13.5	17	○
HHG	3B	25	25.2	M18x1.0	11.5	41.4	7.2	16.5	22	○

Panel cut-out: **P9**

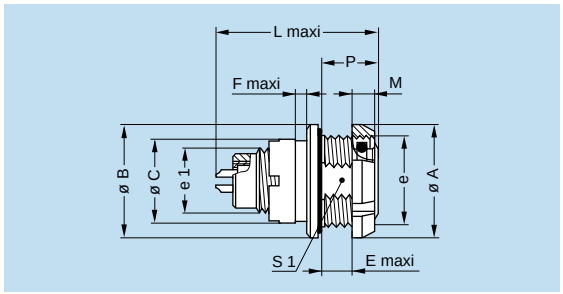

HCG Fixed receptacle, nut fixing, key (G) or keys (A…M), watertight or vacuum-tight
(watertight when mated) (back panel mounting)

Reference		Dimensions (mm)											Avail-ability
Model	Series	A	B	C	e	e1	E	F	L	M	P	S1	
HCG	0B	18	18	12.0	M14x1.0	M9x0.6	3.9	1.0	23.7	3.5	7.5	12.5	○
HCG	1B	20	20	14.5	M16x1.0	M12x1.0	6.2	2.0	29.7	3.5	10.0	14.5	○
HCG	2B	24	24	17.5	M19x1.0	M14x1.0	6.7	1.5	33.7	3.5	11.3	17.0	○

Panel cut-out: **P3**

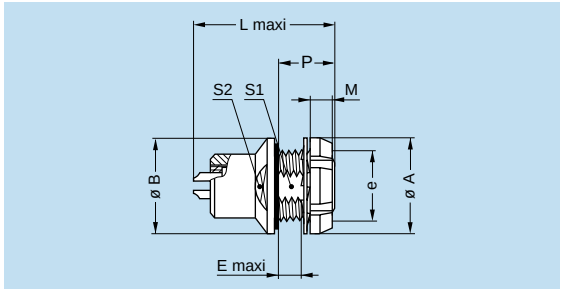

HEG Fixed receptacle, nut fixing, key (G) or keys (A…M), watertight or vacuum-tight (back panel mounting)

Reference		Dimensions (mm)									Avail-ability
Model	Series	A	B	e	E	L	M	P	S1	S2	
HEG	2B	20	20	M15x1.0	5.4	33.7	3.5	9.6	13.5	15	○

Panel cut-out: **P9**

● Standard, typically 0-6 weeks delivery for quantities of 250 or less.
○ Non-standard product, contact LEMO USA, typically 6-12 weeks delivery for quantities of 250 or less.
Non-standard product is defined as any product which contains one or more components which are not standard.

Data Subject to Change

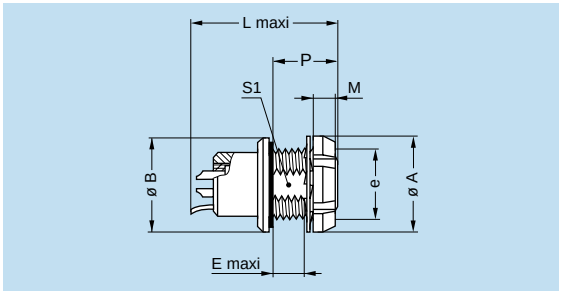

HMG Fixed receptacle with grounding tab, nut fixing, key (G) or keys (A…M), watertight or vacuum-tight
(back panel mounting)

Reference		Dimensions (mm)								Avail-ability
Model	Series	A	B	e	E	L	M	P	S1	
HMG	0B	12	13	M9x0.6	4.7	20.7	2.5	9.0	8.2	○
HMG	1B	16	18	M12x1.0	5.5	26.0	3.5	11.0	10.5	○
HMG	3B	24	25	M18x1.0	7.5	36.2	4.5	13.6	16.5	○

Panel cut-out: **P9**

Note: The 3B series is delivered with a conical nut.

S●● Fixed coupler, nut fixing, key (G) or keys (A, B, J, K and L) at the flange end and key (G) or keys (A, B, J, K and L) at the other end, watertight or vacuum-tight

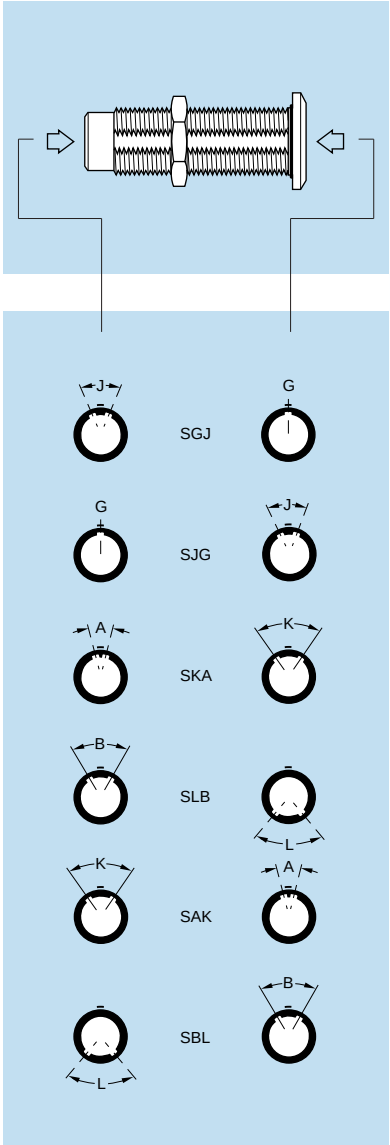

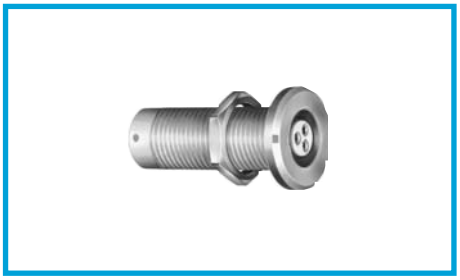

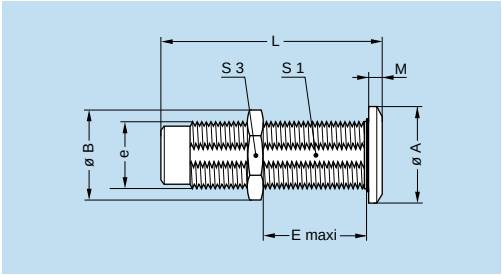

Reference		Contacts	Dimensions (mm)								Avail-ability
Model	Series	Type	A	B	e	E	L	M	S1	S3	
SGJ	0B	female – male	14	13.8	M10x0.75	17	34	2.0	9.0	12	○
SJG		male – female									
SGJ	1B	female – male	17	16.0	M12x1.00	28	39	2.5	10.5	14	○
SJG		male – female									
SGJ	2B	female – male	20	21.8	M16x1.00	25	44	4.0	15.0	19	○
SJG		male – female									
SGJ	3B	female – male	25	27.1	M20x1.00	30	53	4.0	18.5	24	○
SJG		male – female									
SAK		female – male									
SBL		female – male									
SAK	4B	female – male	34	32.0	M25x1.00	50	65	4.0	23.5	30	○
SBL		female – male									
SGJ		female – male									
SJG		male – female									
SGJ	5B	female – male	45	40.0	M35x1.00	58	80	5.0	33.5	–	○
SJG		male – female									
SKA		male – female									
SLB		male – female									
SAK		female – male									
SBL		female – male									

Panel cut-out: **P4** Panel cut-out: **P9** 1B series

Note: For this fixed coupler, the first contact type mentioned is always the one at the flange end.
On request these couplers can be produced in other series, with other keys.
The 5B series is delivered with a round nut.

● Standard, typically 0-6 weeks delivery for quantities of 250 or less.
○ Non-standard product, contact LEMO USA, typically 6-12 weeks delivery for quantities of 250 or less.
Non-standard product is defined as any product which contains one or more components which are not standard.

Threaded-Fixing Models

The 00 multicontact series includes two threaded-fixing plug models. These plugs can be mated with receptacles with a threaded front end (XRB or ESG). Plugs include an O-ring, guaranteeing an IP64 protection index when mated.

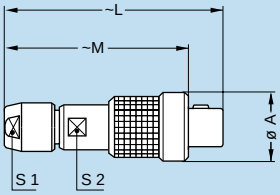

FVG Straight plug, key (G) or keys (A, B), cable collet, threaded-fixing

Reference		Dimensions (mm)					Avail-ability
Model	Series	A	L	M	S1	S2	
FVG	00	9	28.5	24	5	5	○

Note: To be ordered with nut for fitting a bend relief to obtain the rating IP 64.

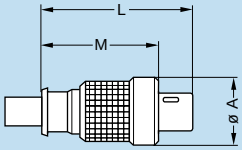

FVB Straight plug, keys (B), threaded-fixing for special cable crimping

Reference		Dimensions (mm)			Avail-ability
Model	Series	A	L	M	
FVB	00	9	20	15.4	○

Note: After assembly the special bend relief GMF.00.018.D● (to be ordered separately) is to be fitted.

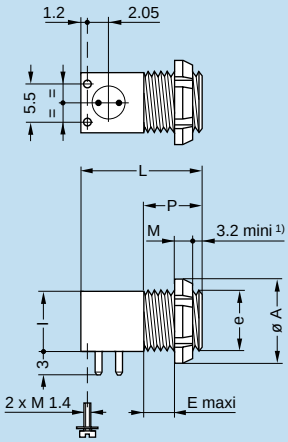

XRB Elbow (90°) receptacle fixing nut for printed circuit, keys (B), short shell, threaded-fixing (back panel mounting)

Reference		Dimensions (mm)							Avail-ability
Model	Series	A	e	E	I	L	M	P	
XRB	00	10	M7x0.5	1.8	7	14	2.5	7	○

Panel cut-out: **P2** PCB drilling pattern: **P18** for contact only

Note: 1) Minimum length of free thread to ensure mating.

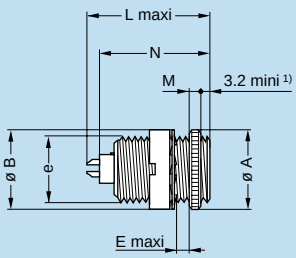

ESG Fixed receptacle with two round nuts, key (G), or keys (A, B), long threaded shell (back panel mounting)

Reference		Dimensions (mm)							Avail-ability
Model	Series	A	B	e	E	L	M	N	
ESG	00	9.5	9	M7x0.5	4.2	15.5	2	13.7	○

Panel cut-out: **P2**

Note: 1) Minimum length of free thread to ensure mating.

● Standard, typically 0-6 weeks delivery for quantities of 250 or less.
○ Non-standard product, contact LEMO USA, typically 6-12 weeks delivery for quantities of 250 or less.
Non-standard product is defined as any product which contains one or more components which are not standard.

Type

Multicontact

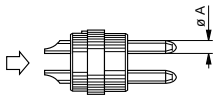

Male solder contacts

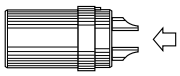

Female solder contacts

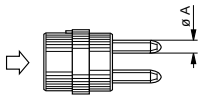

Male crimp contacts

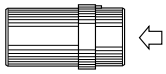

Female crimp contacts

	Reference	Number of contacts	ø A (mm)	Contact type availability: Solder	Contact type availability: Crimp	Contact type availability: Printed circuit (straight)	Contact type availability: Printed circuit (elbow)	Solder contact: Test voltage (kV rms)[1] Contact-contact	Solder contact: Test voltage (kV rms)[1] Contact-shell	Crimp contact: Test voltage (kV rms)[1] Contact-contact	Crimp contact: Test voltage (kV rms)[1] Contact-shell	Rated current (A)[1]
00	302	2	0.5	●	○	○	○	1.00	0.95	1.15	1.20	5.0
	303	3	0.5	●	○	○	○	0.80	0.95	1.35	1.10	3.0
	304	4	0.5	●	○	○	○	0.80	0.65	1.05	1.05	2.0
0B	302	2	0.9	●	●	○	○	1.30	1.05	1.45	1.20	10.0[2]
	303	3	0.9	●	●	○	○	1.20	0.90	1.70	1.60	8.0[2]
	304	4	0.7	●	●	●	○	0.85	0.70	1.35	1.10	7.0[2]
	305	5	0.7	●	●	○	○	1.00	0.70	1.25	1.20	6.5[2]
	306	6	0.5	●	○	○	○	0.85	0.65	1.40	1.20	2.5
	307	7	0.5	●	○	○	○	0.80	0.70	1.40	1.20	2.5
	309	9	0.5	○	○	○	○	0.60	0.50	1.00	0.85	2.0
1B	302	2	1.3	○	○	○	○	1.50	1.35	1.70	1.45	15.0[3]
	303	3	1.3	○	●	○	○	1.30	1.55	1.60	1.85	12.0
	304	4	0.9	●	●	○	○	1.35	1.45	1.70	1.80	10.0[2]
	305	5	0.9	●	●	○	○	1.25	1.15	1.30	1.55	9.0[2]
	306	6	0.7	●	●	○	○	1.05	1.20	1.35	1.45	7.0[2]
	307	7	0.7	●	●	●	○	0.95	1.05	1.45	1.45	7.0[2]
	308	8	0.7	●	○	○	○	0.95	1.15	1.30	1.30	5.0
	310	10	0.5	●	○	○	○	0.90	1.50	1.20	1.80	2.5
	314	14	0.5	○	○	○	○	0.80	1.20	0.95	1.60	2.0
	316	16	0.5	○	○	○	○	0.80	1.25	0.95	1.60	1.5

Note: [1] See calculation method, caution and suggested standard on page 11.
[2] Rated current = 6A for receptacle with elbow (90°) contact for printed circuit.
[3] Rated current = 12A for receptacle with elbow (90°) contact for printed circuit.

Data Subject to Change

● Standard, typically 0-6 weeks delivery for quantities of 250 or less.
○ Non-standard product, contact LEMO USA, typically 6-12 weeks delivery for quantities of 250 or less.
Non-standard product is defined as any product which contains one or more components which are not standard.

Multicontact

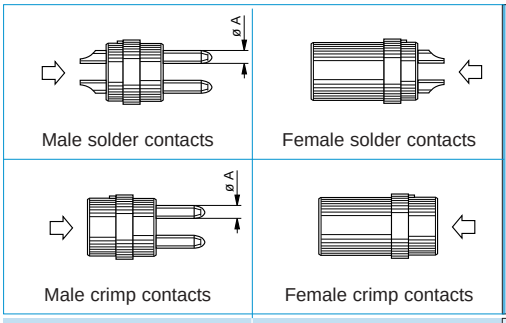

2B

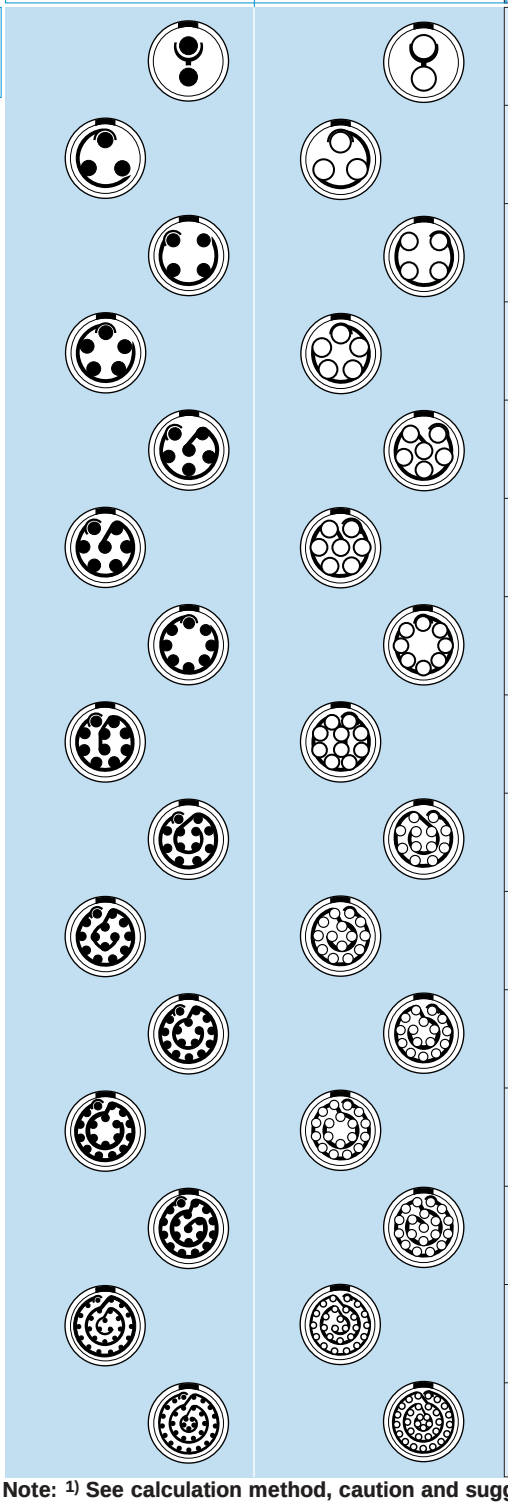

Reference	Number of contacts	ø A (mm)	Contact type availability: Solder	Contact type availability: Crimp	Contact type availability: Printed circuit (straight)	Contact type availability: Printed circuit (elbow)	Solder contact: Test voltage (kV rms)[1] Contact-contact	Solder contact: Test voltage (kV rms)[1] Contact-shell	Crimp contact: Test voltage (kV rms)[1] Contact-contact	Crimp contact: Test voltage (kV rms)[1] Contact-shell	Rated current (A)[1]
302	2	2.0	●	○	○	○	2.10	1.75	2.85	2.70	30.0[3]
303	3	1.6	○	○	○	○	2.40	1.85	1.90	1.90	17.0[3]
304	4	1.3	●	○	○	○	1.85	1.85	2.20	2.20	15.0[3]
305	5	1.3	●	○	○	○	1.75	1.60	2.15	2.15	14.0[3]
306	6	1.3	●	○	○	○	1.35	1.45	2.00	2.35	12.0
307	7	1.3	○	○	○	○	1.75	1.60	1.95	2.15	11.0
308	8	0.9	●	●	○	○	1.50	1.25	1.95	1.95	10.0[2]
310	10	0.9	●	●	●	○	1.45	1.30	1.80	2.10	8.0[2]
312	12	0.7	●	○	●	○	1.25	1.35	1.65	2.00	7.0[2]
314	14	0.7	○	○	○	○	1.15	1.35	1.55	1.95	6.5[2]
316	16	0.7	○	○	○	○	0.95	1.25	1.55	1.75	6.0
318	18	0.7	○	○	○	○	0.85	1.20	1.45	2.10	5.5
319	19	0.7	●	○	○	○	0.95	1.25	1.55	1.65	5.0
326	26	0.5	○	○	○	–	0.95	1.30	1.20	1.80	2.0
332	32	0.5	○	○	○	–	0.80	1.2	0.95	1.60	1.5

Note: [1] See calculation method, caution and suggested standard on page 11

● Standard, typically 0-6 weeks delivery for quantities of 250 or less.
○ Non-standard product, contact LEMO USA, typically 6-12 weeks delivery for quantities of 250 or less.
Non-standard product is defined as any product which contains one or more components which are not standard.

Data Subject to Change

Multicontact

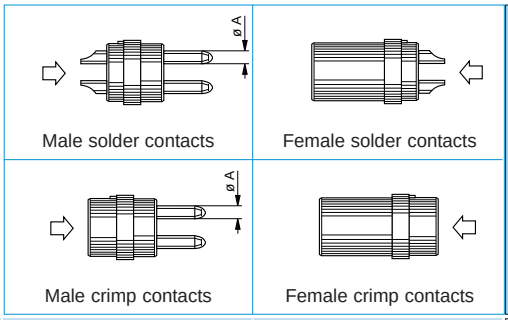

3B

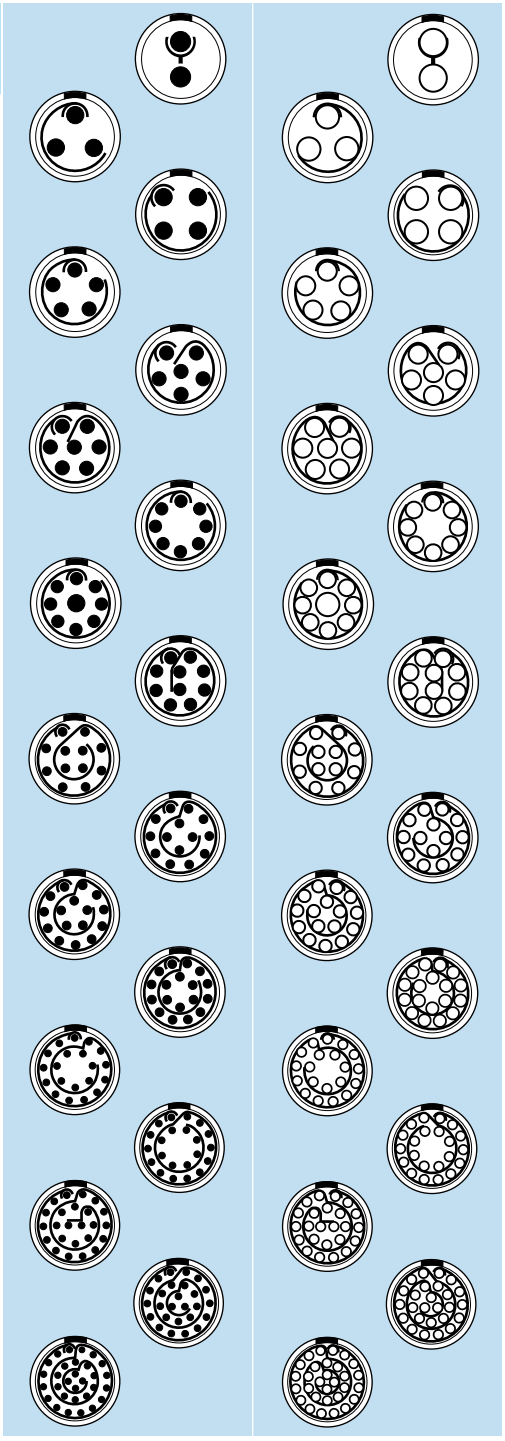

Reference	Number of contacts	ø A (mm)	Contact type availability: Solder	Contact type availability: Crimp	Contact type availability: Printed circuit (straight)	Contact type availability: Printed circuit (elbow)	Solder contact: Test voltage (kV rms)[1] Contact-contact	Solder contact: Test voltage (kV rms)[1] Contact-shell	Crimp contact: Test voltage (kV rms)[1] Contact-contact	Crimp contact: Test voltage (kV rms)[1] Contact-shell	Rated current (A)[1]
302	2	3.0	○	○	○	–	2.10	1.55	2.30	1.80	35.0
303	3	2.0	○	○	○	–	1.90	1.50	3.20	2.65	25.0
304	4	2.0	○	○	○	–	1.45	1.25	2.50	2.20	19.0
305	5	1.6	○	○	○	–	1.90	1.25	2.40	1.75	19.0
306	6	1.6	○	○	○	–	1.60	1.15	1.90	1.80	17.0
307	7	1.6	●	○	○	–	1.70	1.25	2.00	2.05	15.0
308	8	1.3	○	○	○	○	1.65	1.15	1.85	1.75	13.0
309	8 1	1.3 2.0	○	○	○	–	1.35 1.35	1.05 1.05	1.10 1.10	1.05 1.05	6.0 15.0
310	10	1.3	○	○	○	○	1.25	0.90	1.50	1.80	12.0
312	12	0.9	○	○	○	○	1.45	1.00	1.65	1.85	9.0
314	14	0.9	○	○	○	○	1.20	1.20	1.80	1.65	9.0[2]
316	16	0.9	○	○	○	○	1.20	0.85	1.80	1.50	8.0
318	18	0.9	○	○	○	○	1.20	1.05	1.85	1.60	7.0
320	20	0.7	○	○	○	○	1.00	0.90	1.35	1.55	6.0
322	22	0.7	○	○	○	○	1.00	0.90	1.70	1.45	5.5
324	24	0.7	○	○	○	○	0.95	0.80	1.35	1.35	4.0
326	26	0.7	○	○	○	○	0.95	0.70	1.50	1.30	4.0
330	30	0.7	○	○	○	○	0.80	0.70	1.35	1.20	3.5

Note: [1] See calculation method, caution and suggested standard on page 11.
[2] Rated current = 6A for receptacle with elbow (90°) contact for printed circuit.

Data Subject to Change

● Standard, typically 0-6 weeks delivery for quantities of 250 or less.
○ Non-standard product, contact LEMO USA, typically 6-12 weeks delivery for quantities of 250 or less.
Non-standard product is defined as any product which contains one or more components which are not standard.

Multicontact

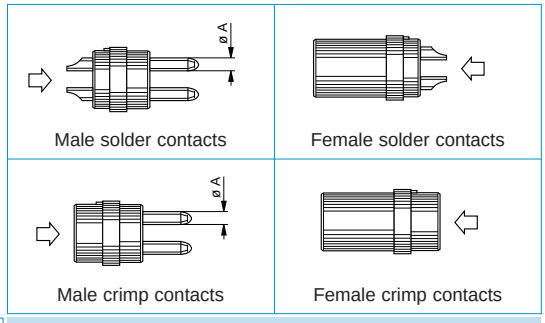

4B

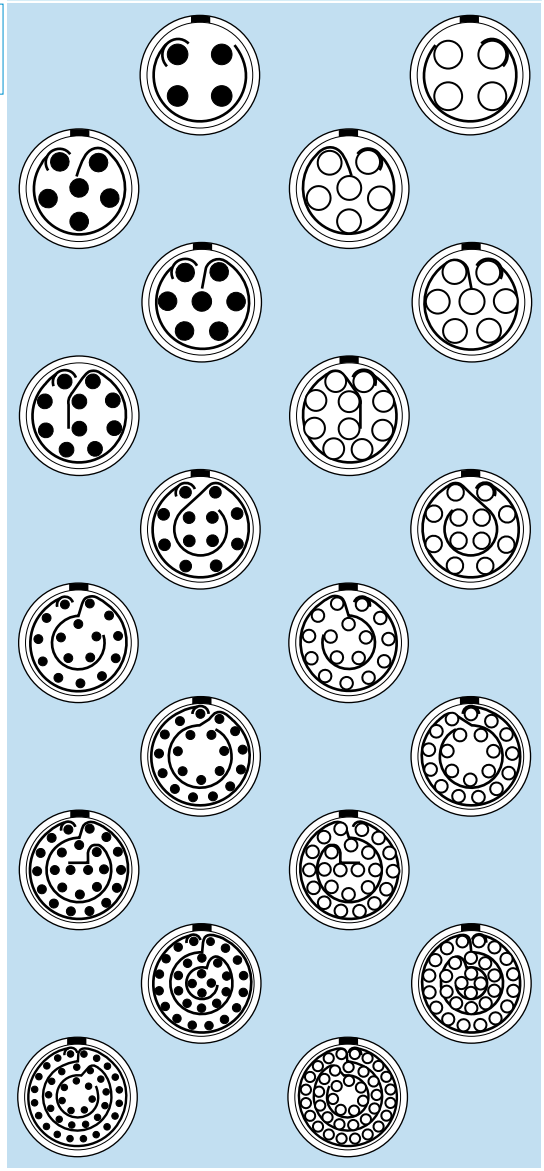

Reference	Number of contacts	ø A (mm)	Contact type availability			Solder contact		Crimp contact		Rated current (A)[1]
			Solder	Crimp	Printed circuit (straight)	Test voltage (kV rms)[1] Contact-contact	Test voltage (kV rms)[1] Contact-shell	Test voltage (kV rms)[1] Contact-contact	Test voltage (kV rms)[1] Contact-shell	
304	4	3.0	○	○	○	2.10	1.50	1.80	1.20	30.0
306	6	2.0	○	○	○	2.00	1.75	2.75	2.40	24.0
307	7	2.0	○	○	○	2.00	1.80	1.50	1.35	20.0
310	10	1.6	○	○	○	1.85	1.30	1.90	1.95	17.0
312	12	1.3	○	○	○	1.45	1.60	1.90	1.85	12.0
316	16	0.9	○	○	○	1.35	1.50	2.30	2.10	10.0
320	20	0.9	○	○	○	1.35	1.00	1.05	0.95	8.0
324	24	0.9	○	○	○	1.20	1.45	1.80	2.05	7.0
330	30	0.9	○	○	○	0.95	0.85	1.75	1.45	5.0
340	40	0.7	○	○	○	0.90	0.95	1.35	1.30	2.0

Note: [1] See calculation method, caution and suggested standard on page 11

● Standard, typically 0-6 weeks delivery for quantities of 250 or less.
○ Non-standard product, contact LEMO USA, typically 6-12 weeks delivery for quantities of 250 or less.
Non-standard product is defined as any product which contains one or more components which are not standard.

Multicontact

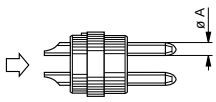

Male solder contacts

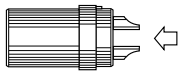

Female solder contacts

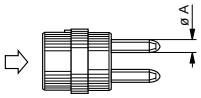

Male crimp contacts

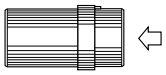

Female crimp contacts

5B

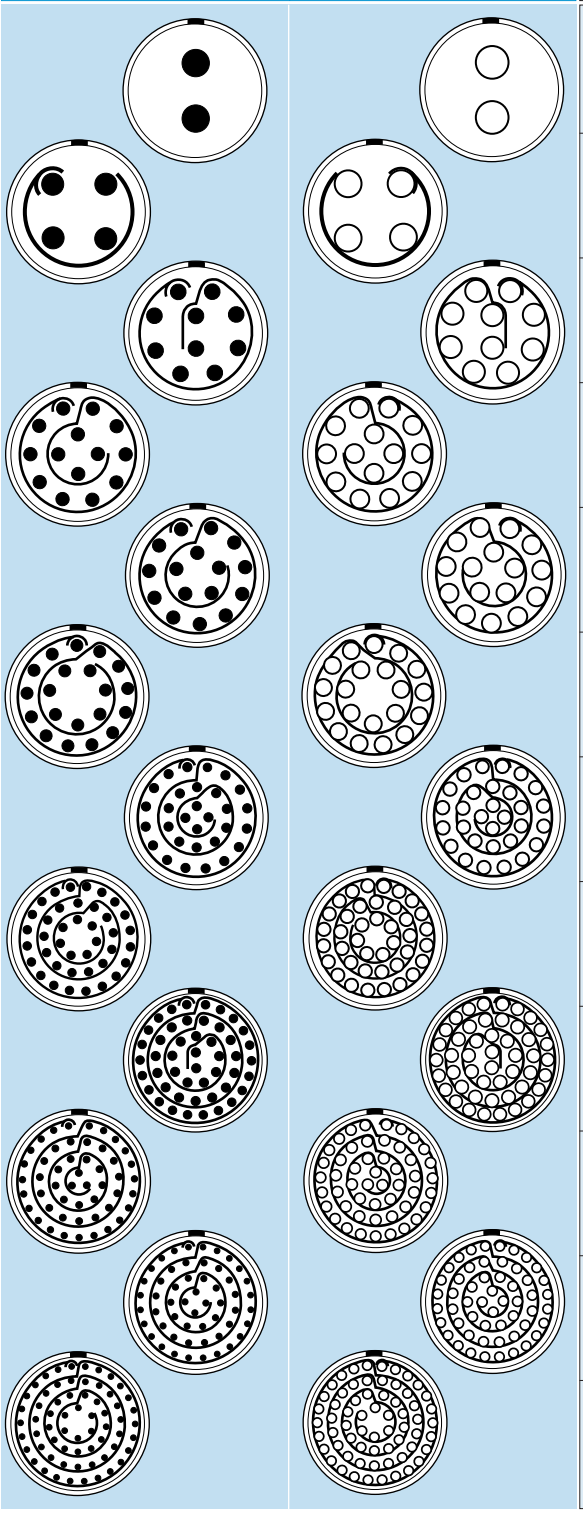

Reference	Number of contacts	ø A (mm)	Contact type availability			Solder contact		Crimp contact		Rated current (A)[1]
			Solder	Crimp	Printed circuit (straight)	Test voltage (kV rms)[1] Contact-contact	Test voltage (kV rms)[1] Contact-shell	Test voltage (kV rms)[1] Contact-contact	Test voltage (kV rms)[1] Contact-shell	
302	2	6.0	○	–	–	3.60	2.95	–	–	50.0
304	4	4.0	○	○	○	2.95	2.65	3.20	2.40	35.0
310	10	3.0	○	○	○	2.35	2.30	2.65	3.20	20.0
314	14	2.0	○	○	○	2.10	2.00	2.85	2.95	18.0
316	16	2.0	○	○	○	1.85	1.95	2.45	3.05	12.0
320	20	1.6	○	○	○	1.90	1.70	2.20	2.40	10.0
330	30	1.3	○	○	○	1.45	1.60	2.05	2.45	8.0
340	40	1.3	○	○	○	1.30	1.45	2.00	1.95	7.0
348	48	1.3	○	○	○	1.20	1.10	2.00	1.55	6.0
350	50	0.9	○	○	○	1.30	1.60	1.20	1.45	6.0
354	54	0.9	○	○	○	1.15	1.55	2.00	2.10	5.0
364	64	0.9	○	○	○	1.30	1.55	1.35	1.85	3.0

Note: [1] See calculation method, caution and suggested standard on page 11.

Data Subject to Change

● Standard, typically 0-6 weeks delivery for quantities of 250 or less.
○ Non-standard product, contact LEMO USA, typically 6-12 weeks delivery for quantities of 250 or less.
Non-standard product is defined as any product which contains one or more components which are not standard.

Mixed (High Voltage + Low Voltage)

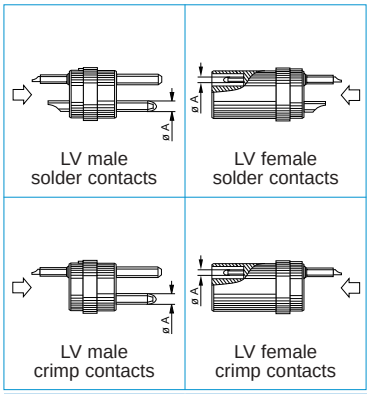

	Reference	High voltage									Low voltage								
		Number of contacts	Contact ø A (mm)	Contact type[1]	HV contact gender with key «G»[2]	Conductor AWG max.	Cable dielectric ø max. (mm)	Standard insulator material[3]	Test voltage (kV dc)[4]	Rated current (A)[1]	Number of contacts	Contact ø A (mm)	Contact type: Solder	Contact type: Crimp	Solder contact: Test voltage (kV rms)[4] Contact-contact	Solder contact: Test voltage (kV rms)[4] Contact-shell	Crimp contact: Test voltage (kV rms)[4] Contact-contact	Crimp contact: Test voltage (kV rms)[4] Contact-shell	Rated current (A)[4]
1B	702	1	0.7	S	L	26	1.5	L	7.5	2	2	1.3	○	○	1.2	0.9	0.6	0.50	8
	731	2	0.7	S	L	26	1.5	L	7.5	2	1	1.3	○	○	1.2	0.9	0.6	0.50	8
2B	704	1	1.3	S	L	20	3.4	L/T	7.5	8	4	0.7	○	○	0.85	1.2	0.6	1.0	5
	706	1	0.7	S	L	22	2.0	L	7.5	3	6	1.3	○	○	1.75	1.6	1.05	1.15	11
	708	1	0.9	S	L	22	3.0	L	8.0	4	8	0.9	○	○	1.5	1.25	0.75	0.75	10
3B	709	1	0.9	S	L	22	3.0	L	12	4	9	0.7	○	○	1.7	0.9	1.45	0.65	5
	712	1	0.9	S	L	22	3.0	L	12	4	12	0.9	○	○	1.2	0.85	0.75	0.60	5
	718	1	1.3	S	L	20	3.4	L/T	7.5	8	18	0.7	○	○	0.7	0.7	0.4	0.55	5.5
	740	2	0.9	S	L	22	3.0	L	12	3	10	0.7	○	○	0.8	0.7	0.5	0.55	5
4B	745	2	0.9	S	L	22	3.0	L	18	3	16	0.9	○	○	1.2	1.45	0.7	1.2	7
5B	752	2	2.0	S	A	14	3.9	L	6.5	12	20 2	1.3 1.6	– ○	○ –	– 2.8	– 2.8	1.5 –	1.5 –	8 10
	759	2	0.9	S	L	22	3.0	L	18	3	54	0.9	○	○	1.3	1.55	0.9	1.3	3

Note:
1) S = solder, C = crimp
2) A = male for plug; female for socket, L = female for plug; male for socket
3) L = Peek, T = PTFE
4) See calculation method, caution and suggested standard on page 11

● Standard, typically 0-6 weeks delivery for quantities of 250 or less.
○ Non-standard product, contact LEMO USA, typically 6-12 weeks delivery for quantities of 250 or less.
Non-standard product is defined as any product which contains one or more components which are not standard.

Mixed (Coax + Low Voltage)

		Reference	Number of contacts	Coax Impedance / Coax contact type	ø A (mm)	Contact type availability: Solder	Contact type availability: Crimp	Solder wire max AWG	Crimp wire max AWG	Coax[1] cable group	Test Voltage: AC (V)	Test Voltage: DC (V)	Rated current (Amps)
2B	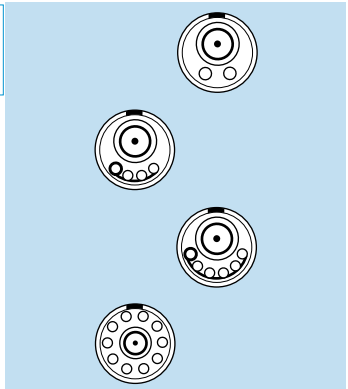	802	1 coax 2 LV	50 ohms Type A1	.7 .9	○	○	26 22	- 20	1-2-3 -	900 1000	1440 1500	5 8
		804	1 coax 4 LV	50 ohms Type A1	.7 .7	○	○	26 22	- 22	1-2-3 -	900 1200	1440 1800	5 5
		806	1 coax 6 LV	50 ohms Type A1	.7 .7	○	○	26 22	- 22	1-2-3 -	900 1200	1440 1800	5 5
		810	1 coax 10 LV	50 ohms Type C[1]	.7 .7	○	○	- 22	22 22	1-2-3 -	900 1700	1440 2500	5 6.5
3B	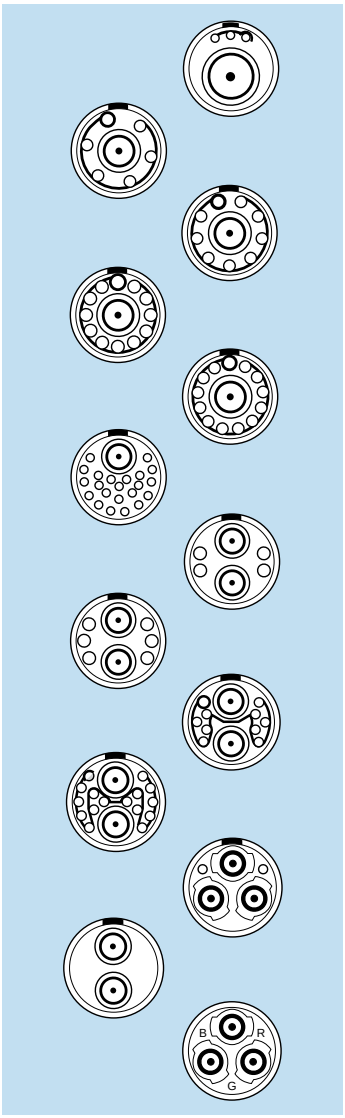	803	1 coax 3 LV	50 ohms Type A0	1.3 .9	○	○	20 22	- 20	6 -	3000 800	4200 1200	5 5
		806	1 coax 6 LV	50 ohms Type A1	.7 .7	○	○	26 22	- 22	1-2-3 -	900 1200	1440 1800	5 5
		809	1 coax 9 LV	50 ohms Type A1	.7 .7	○	○	26 22	- 22	1-2-3 -	900 1200	1440 1800	5 5
		812	1 coax 12 LV	50 ohms Type A1	.7 .9	○	○	26 22	- 20	1-2-3 -	900 1200	1440 1800	5 5
		813	1 coax 13 LV	50 ohms Type A1	.7 .7	○	○	26 22	22 22	1-2-3 -	900 1200	1440 1800	5 5
		822	1 coax 22 LV	50 ohms Type C[1]	.7 .7	○	○	- 22	22 22	1-2-3 -	1500 1200	2190 1800	2 5
		844	2 coax 4 LV	50 ohms Type C[1]	.7 .9	○	○	- 22	22 20	1-2-3 -	1500 1200	2190 1800	2 8
		846	2 coax 6 LV	50 ohms Type C[1]	.7 .9	○	○	- 22	22 20	1-2-3 -	1500 1200	2190 1800	2 8
		850	2 coax 10 LV	50 ohms Type C[1]	.7 .7	○	○	- 22	22 22	1-2-3 -	1500 600	2190 850	2 5
		856	2 coax 16 LV	50 ohms Type C[1]	.7 .7	○	○	- 22	22 22	1-2-3 -	1500 600	2190 850	2 3
		862	3 coax 2 LV	50 ohms Type C[1]	.7 .9	○	○	- 22	22 20	1-2-3 -	1500 1200	2190 1800	2 7
		242	2 coax	50 ohms Type C[1]	.7	○	○	-	22	1-2-3	1500	2190	2
		243	3 coax	50 ohms Type C[1]	.7	○	○	-	22	1-2-3	1500	2190	2

1) You may substitute fluidic/pneumatic or fiber optic contacts

Data Subject to Change

● Standard, typically 0-6 weeks delivery for quantities of 250 or less.
○ Non-standard product, contact LEMO USA, typically 6-12 weeks delivery for quantities of 250 or less.
Non-standard product is defined as any product which contains one or more components which are not standard.

Mixed (Coax + Low Voltage)

4B

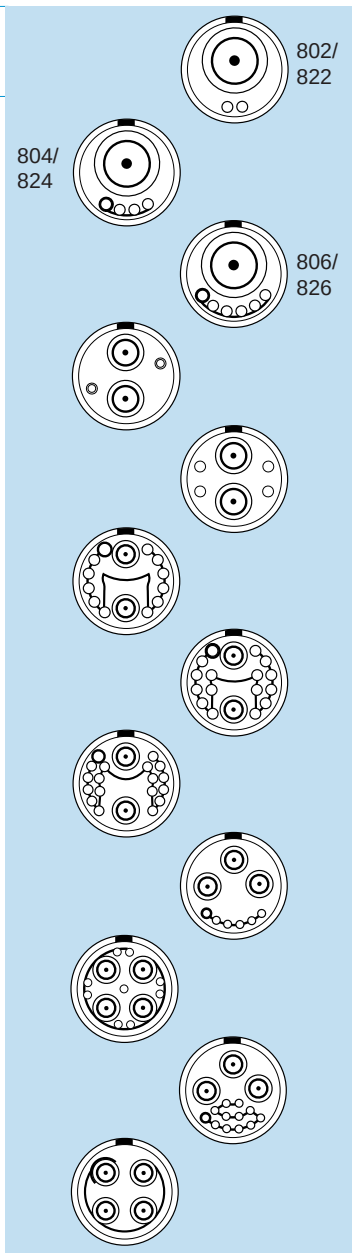

Reference	Number of contacts	Coax Impedance / Coax contact type	ø A (mm)	Contact type avail. Solder	Contact type avail. Crimp	Solder wire max AWG	Crimp wire max AWG	Coax[1] cable group	Test Voltage AC (V)	Test Voltage DC (V)	Rated current (Amps)
802	1 coax 2 LV	50 ohms Type A	1.6 .9	○	○	18 22	- 20	6 -	1800 1200	2700 1800	12 8
822	1 coax 2 LV	75 ohms Type A	1.3 .9	○	○	20 22	- 20	4-5-7 -	2400 1200	3300 1800	7 8
804	1 coax 4 LV	50 ohms Type A	1.6 .9	○	○	18 22	- 20	6 -	1800 1200	2700 1800	12 7
824	1 coax 4 LV	75 ohms Type A	1.3 .9	○	○	20 22	- 20	4-5-7 -	2400 1200	3300 1800	7 7
806	1 coax 6 LV	50 ohms Type A	1.6 .9	○	○	18 22	- 20	6 -	1800 1200	2700 1800	12 5
826	1 coax 6 LV	75 ohms Type A	1.3 .9	○	○	20 22	- 20	4-5-7 -	2400 1200	3300 1800	7 5
842	2 coax 2 LV	50 ohms Type A1	.7 .9	○	○	26 22	- 20	1-2-3 -	900 1200	1440 1800	5 8
844	2 coax 4 LV	50 ohms Type A1	.7 .9	○	○	26 22	- 20	1-2-3 -	900 1200	1440 1800	5 7
852	2 coax 12 LV	50 ohms Type C[1]	.7 .9	○	○	- 22	22 20	1-2-3 -	1500 1200	2100 1800	2 4
856	2 coax 16 LV	50 ohms Type C[1]	.7 .9	○	○	- 22	22 20	1-2-3 -	1500 1200	2100 1800	2 4
858	2 coax 18 LV	50 ohms Type C[1]	.7 .7	○	○	- 22	22 22	1-2-3 -	1500 1500	2100 2100	2 2
866	3 coax 6 LV	50 ohms Type C[1]	.7 .7	○	○	- 22	22 22	1-2-3 -	1500 1000	2100 1500	2 3
879	4 coax 9 LV	50 ohms Type C[1]	.7 .7	○	○	- 22	22 22	1-2-3 -	1500 1000	2100 1500	2 3
885	3 coax 12 LV	50 ohms Type C[1]	.7 .7	○	○	- 22	22 22	1-2-3 -	1500 1000	2100 1500	2 2
244	4 coax	50 ohms Type C[1]	.7	○	○	-	22	1-2-3	1000	1500	2

1) You may substitute fluidic/pneumatic or fiber optic contacts

● Standard, typically 0-6 weeks delivery for quantities of 250 or less.
○ Non-standard product, contact LEMO USA, typically 6-12 weeks delivery for quantities of 250 or less.
Non-standard product is defined as any product which contains one or more components which are not standard.

Mixed (Coax + Low Voltage)

5B

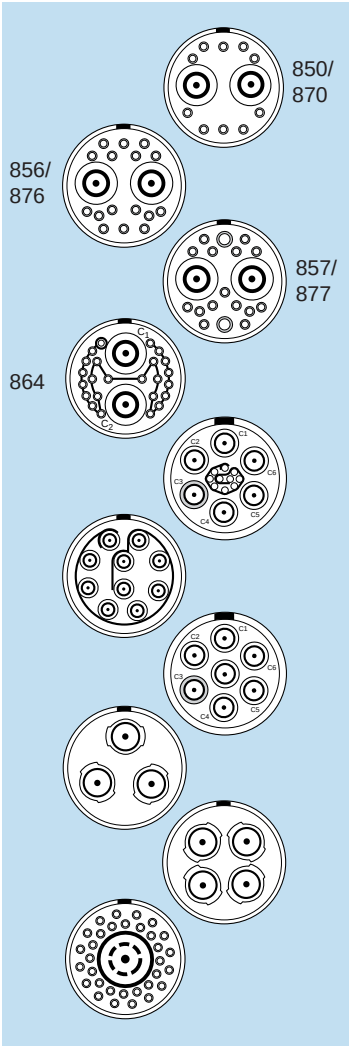

Reference	Number of contacts	Coax Impedance / Coax contact type	ø A (mm)	Contact type avail. Solder	Contact type avail. Crimp	Solder wire max AWG	Crimp wire max AWG	Coax[1] cable group	Test Voltage AC (V)	Test Voltage DC (V)	Rated current (Amps)
850	2 coax 10 LV	50 ohms Type B	1.3 .9	○	○	- 22	20 20	1-2-6 -	840 1500	1380 2100	11 8
870	2 coax 10 LV	75 ohms Type B	.9 .9	○	○	- 22	22 20	3-5 -	2100 500	3000 2100	6 8
856	2 coax 16 LV	50 ohms Type B	1.3 .9	○	○	- 22	20 20	1-2-6 -	840 1500	1380 2100	11 8
876	2 coax 16 LV	75 ohms Type B	.9 .9	○	○	- 22	22 20	3-5 -	2100 1500	3000 2100	6 8
857	2 coax 17 LV	50 ohms Type B	1.3 2@2.0 15@.9	○	○	- 2@16 15@22	20 2@12 15@20	1-2-6 -	840 1500	1380 2100	11 2@30 15@8
877	2 coax 17 LV	75 ohms Type B	.9 2@2.0 15@.9	○	○	- 2@16 15@22	22 2@12 15@20	3-5 -	2100 1500	3000 2100	6 2@30 15@8
864	2 coax 24 LV	50 ohms Type B	1.3 1.3	○	○	- 20	20 -	1-2-6 -	840 1500	1380 2100	11 8
892	6 coax 10 LV	75 ohms Type D	.7 .9	○	○	22 22	- -	5 -	1000 600	1500 900	5 4
240	10 coax	50 ohms Type C[1]	.7	○	○	-	24	1-2-3	1000	1500	2
260	7 coax	75 ohms Type D	.7	○	○	22	-	5	1000	1500	5
273	3 coax	75 ohms Type B	.9	○	○	-	22	3-5	2100	3000	6
274	4 coax	75 ohms Type B	.9	○	○	-	22	3-5	2100	3000	6
997	1 triax 32 LV	50 ohms Type A1	.9 1.3	○	○	22 20	- -	8 -	2400 1500	3300 2100	7 8

1) You may substitute fluidic/pneumatic or fiber optic contacts

Data Subject to Change

● Standard, typically 0-6 weeks delivery for quantities of 250 or less.
○ Non-standard product, contact LEMO USA, typically 6-12 weeks delivery for quantities of 250 or less.
Non-standard product is defined as any product which contains one or more components which are not standard.

Technical Information

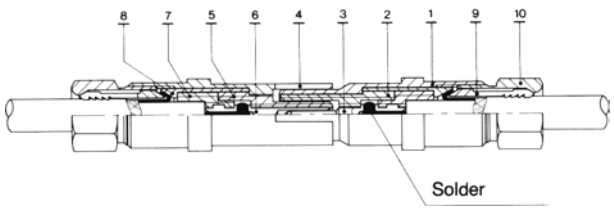

Coaxial, Type A0, A, A1 and type A3

The coaxial of this type is permanently fixed into the insert. The conductor is soldered and the shield is clamped.

Component	Material	Surface Treatment		
		Cu	Ni	Au
1 Male Sleeve	Brass (UNS C 38500)	0.5	3	1.5
2 Insert	PTFE (UNS D 1457-83)	-	-	-
3 Male Contact	Brass (UNS C 38500)	0.5	3	1.5
4 Female Sleeve	Bronze (UNS C 54400)	0.5	3	2.0
5 Insert	PTFE (UNS D 1457-83)	-	-	-
6 Female Contact	Bronze (UNS C 54400)	0.5	3	2.5
7 Insulating Sleeve	PTFE (UNS D 1457-83)	-	-	-
8 Grounding Sleeve	Brass (UNS C 38500)	0.5	3	-
9 Collet	Brass (UNS C 38500)	0.5	3	-
10 Ferrule	Brass (UNS C 38500)	0.5	3	-

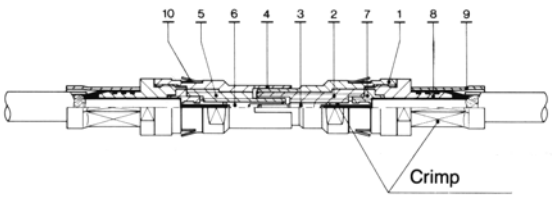

Coaxial, Type B

In this type, the coaxial is removable and fixed in place by clips. The conductor and shield are crimped.

Component	Material	Surface Treatment		
		Cu	Ni	Au
1 Male Sleeve	Brass (UNS C 38500)	0.5	3	1.5
2 Insert	PTFE (UNS D 1457-83)	-	-	-
3 Male Contact	Brass (UNS C 38500)	0.5	3	1.5
4 Female Sleeve	Bronze (UNS C 54400)	0.5	3	2.0
5 Insert	PTFE (UNS D 1457-83)	-	-	-
6 Female Contact	Bronze (UNS C 54400)	0.5	3	2.5
7 Insulating Sleeve	PTFE (UNS D 1457-83)	-	-	-
8 Crimp Nuts	Brass (UNS C 38500)	0.5	3	1.5
9 Collet	Brass (UNS C 18700)	0.5	3	-
10 Clips	Cu-Be (FS-QQ-C-530)	-	-	-

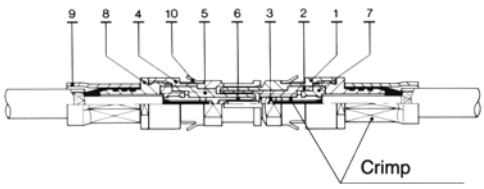

Coaxial, Type C

In this type, the coaxial is removable and fixed in place by clips. The conductor and shield are crimped.

Component	Material	Surface Treatment		
		Cu	Ni	Au
1 Male Sleeve	Brass (UNS C 38500)	0.5	3	1.5
2 Insert	PTFE (UNS D 1457-83)	-	-	-
3 Male Contact	Brass (UNS C 38500)	0.5	3	1.5
4 Female Sleeve	Bronze (UNS C 54400)	0.5	3	2.0
5 Insert	PFTE (UNS D 1457-83)	-	-	-
6 Female Contact	Bronze (UNS C 54400)	0.5	3	2.5
7 Insulating Sleeve	PTFE (UNS D 1457-83)	-	-	-
8 Crimp Nuts	Brass (UNS C 38500)	0.5	3	1.5
9 Crimp Ferrule	Brass (UNS C 18700)	0.5	3	-
10 Clips	Brass (UNS C 38500)	-	-	-

Data Subject to Change

Technical characteristics for coax contacts

Coaxial, Type D

In this type, the coaxial is removable and fixed in place by clips. The conductor is solder the and shield is crimped.

Component	Material	Surface Treatment		
		Cu	Ni	Au
1 Male Sleeve	Brass (UNS C 38500)	0.5	3	1.5
2 Insert	PTFE (UNS D 1457-83)	-	-	-
3 Male Contact	Brass (UNS C 38500)	0.5	3	1.5
4 Female Sleeve	Bronze (UNS C 54400)	0.5	3	2.0
5 Insert	PFTE (UNS D 1457-83)	-	-	-
6 Female Contact	Bronze (UNS C 54400)	0.5	3	2.5
7 Insulating Sleeve	PTFE (UNS D 1457-83)	-	-	-
8 Crimp Nuts	Brass (UNS C 38500)	0.5	3	1.5
9 Crimp Ferrule	Brass (UNS C 18700)	0.5	3	-
10 Clips	Brass (UNS C 38500)	-	-	-

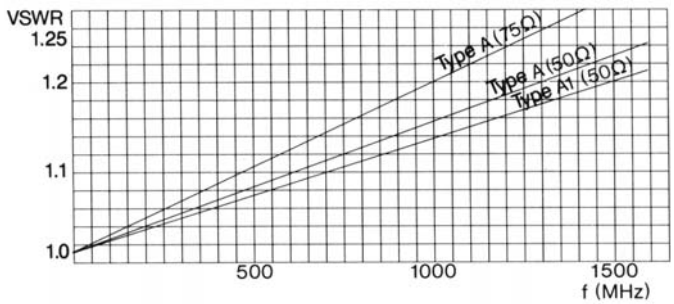

Characteristics	Unit	Coax Type A		Coax Type A1
Impedance	Ω	50	75	50
Operating voltage at 50 Hz	AC	600	800	300
Test voltage at 50 Hz	AC	1800	2300	800
Rated current	A	12	7	5
Insulating resisance	Ω	$>10^{12}$	$>10^{12}$	$>10^{12}$
Contact resistance	mΩ	2.0	2.9	3.8
Shell to shell resistance	mΩ	1.8	1.8	3
VSWR (f = GHz)	-	1.01 +0.156f	1.01 +0.063f	1.04 +0.127f

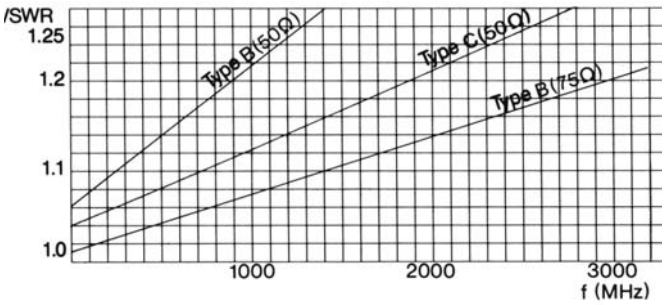

Characteristics	Unit	Coax Type B		Coax Type C
Impedance	Ω	50	75	50
Operating voltage at 50 Hz	AC	280	700	500
Test voltage at 50 Hz	AC	800	2100	1600
Rated current	A	11	6	2
Insulating resisance	Ω	$>10^{12}$	$>10^{12}$	$>10^{12}$
Contact resistance	mΩ	4.1	5.7	5.8
Shell to shell resistance	mΩ	3.2	3.2	3.7
VSWR (f = GHz)	-	1.01 +0.156f	1.01 +0.063f	1.04 +0.064f

Recommended coaxial and triaxial cable for mixed coax and multicoax connectors

Type	Group 1)								
	1	2	3	4	5	6	7	8	9
RG.6 A/U							■		
RG.11 A/U									■
RG.58 C/U						■			
RG.59 B/U					■				
RG.174 A/U	■								
RG.178 B/U		■							
RG.179 B/U			■						
RG.180 B/U				■					
RG.187 A/U			■						
RG.188 A/U	■								
RG.196 A/U		■							
RG.316 /U	■								
Triaxial									■

1) The cable group number corrresponding to the chosen cable must be written in the variant position of the part number.

Data Subject to Change

Housings

Ref.	Material	Surface treatment		Note
		Outer shell and collet nut	Latch sleeve and grounding crown	
C	Brass	chrome	nickel	■
N	Brass	nickel	nickel	□
K	Brass	black chrome	nickel	□
S	Stainless steel	without treatment	nickel-plated brass	□
T	Stainless steel	without treatment	stainless steel	□
U	Stainless steel[1)]	without treatment	stainless steel	□
L	Aluminium alloy[2)]	anodized	nickel-plated brass	□
H	PPS[3)]/brass	without treat./Ni	nickel-plated brass	□
G	PEEK[4)]	without treatment	nickel-plated brass	□
P	PA.6[5)]	without treatment	nickel-plated brass	□
P	PSU[6)]	without treatment	nickel-plated brass	□
R	PPSU[7)]	without treatment	nickel-plated brass	□
X	Avional[8)]	nickel	nickel-plated brass	□

Note: detailed characteristics of these materials and treatments are presented on page 5.
1) The other metallic parts are in stainless steel.
2) The «variant» position of the reference is used to specify the anodized color.
3) Only available for elbow (90°) receptacles for printed circuit of the B and S series.
4) Only available for FGG and ENG models of the B series.
5) Only for CFF and CRG bridge plugs.
6) Only available for ENY and FGY models of the B series. For the color, see the «variant» position.
7) Only available for ENY and FGY models of the B series.
8) Anthracite color.

■ First choice alternative □ Special order alternative

Insulators

Ref.	Material	Note
L	PEEK	1)
Y	PEEK	2)

Note: Detailed characteristics of these materials are presented on page 7.
1) For solder or printed circuit contacts.
2) Only for crimp contacts. For the type 3B.309; 4B.304; 4B.307; 4B.320; 5B.304 and 5B.350, the reference shall be «L» instead of «Y».

Contacts

Contacts for plugs, free or fixed receptacles

Ref.	Contact type
A	Male solder
C	Male crimp (fig. 1)[1)]
B	Male crimp (fig. 2)[1)]
G	Male crimp (fig. 2)[1)]
L	Female solder

Ref.	Contact type
M	Female crimp (fig. 1)[1)]
P	Female crimp (fig. 2)[1)]
U	Female crimp (fig. 2)[1)]
N	Female straight printed circuit
V	Female elbow printed circuit

Note: [1)] There are two forms of crimp barrels. Please consult adjacent table for contact selection and page 10 for figures.

Contacts for couplers, plug with receptacle and bridge plug

Ref.	Contact type
A	Male - Female
C	Male - Male
E	Male - Male - Female

Ref.	Contact type
F	Female - Female - Male
L	Female - Male

Note: The first contact type mentioned is always the one at the flange end.

Dimension of crimp barrels

Contact			Ref. contact type		Conductor			
ø A (mm)	ø C (mm)	Form per fig.	Male	Female	AWG		Section (mm²)	
					min.	max.	min.	max.
0.5	0.45	1	C	M	32	28	0.035	0.09
0.7	0.80	1	C	M	26	22	0.140	0.34
	0.45	2	B	P	32	28	0.035	0.09
0.9	1.10	1	C	M	24	20	0.250	0.50
	0.80	2	B	P	26	22	0.140	0.34
	0.45	2	G	U	32	28	0.035	0.09
1.3	1.40	1	C	M	20	18	0.500	1.00
	1.10	2	B	P	24	20	0.250	0.50
	0.80	2	G	U	26	22	0.140	0.34
1.6	1.90	1	C	M	18	14	1.000	1.50
	1.40	2	B	P	22	18	0.340	1.00
2.0	2.40	1	C	M	16	12	1.500	2.50
	1.90	2	B	P	18	14	1.000	1.50
3.0	2.90	1	C	M	14	10	2.500	4.00
4.0	4.00	1	C	M	12	10	4.000	6.00

Collets

D and M type collets

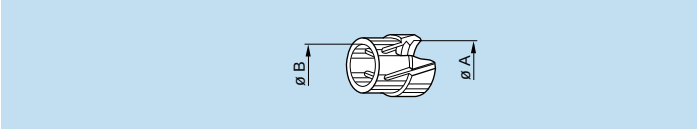

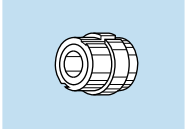
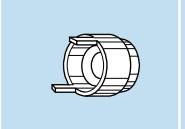
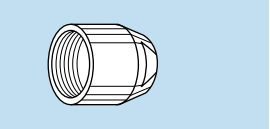

	Reference		Collet ø		Cable ø		Part number of the collet 1)	Part number of the reducer 2)	Part number of the reducing cone 2)	Part number of the collet nut	Avail-ability
	Type	ø	ø A	ø B	max.	min.					
00	D	17	1.7	–	1.6	1.1	FGG.00.717.DN	–	–	FGG.00.130.LC	○
	D	22	2.2	–	2.1	1.6	FGG.00.722.DN	–	–	FGG.00.130.LC	○
	D	27	2.7	–	2.6	2.1	FGG.00.727.DN	–	–	FGG.00.130.LC	●
	D	30	3.1	2.8	3.0	2.5	FGG.00.730.DN	–	–	FGG.00.130.LC	●
	D	35	3.5	2.8	3.4	2.9	FGG.00.735.DN	–	–	FGG.00.130.LC	●
0B	D	21	2.1	–	2.0	1.5	FGG.0B.721.DN	–	–	FGG.0B.130.LC	●
	D	31	3.1	–	3.0	2.1	FGG.0B.731.DN	–	–	FGG.0B.130.LC	●
	D	42	4.2	–	4.0	3.1	FGG.0B.742.DN	–	–	FGG.0B.130.LC	●
	D	52	5.2	4.7	5.0	4.1	FGG.0B.752.DN	–	–	FGG.0B.130.LC	●
	D	56	5.6	4.7	5.5	5.1	FGG.0B.756.DN 3)	–	–	FGG.0B.132.LC	●
1B	M	27	2.7	–	2.6	2.2	FFC.00.727.CN	FGG.1B.138.LN	FGG.1B.158.LN	FGG.1B.130.LC	●
	M	31	3.1	–	3.0	2.6	FFC.00.731.CN	FGG.1B.138.LN	FGG.1B.158.LN	FGG.1B.130.LC	●
	D	42	4.2	–	4.0	3.1	FGG.1B.742.DN	–	–	FGG.1B.130.LC	●
	D	52	5.2	–	5.0	4.1	FGG.1B.752.DN	–	–	FGG.1B.130.LC	●
	D	62	6.2	–	6.0	5.1	FGG.1B.762.DN	–	–	FGG.1B.130.LC	●
	D	72	7.2	6.7	7.0	6.1	FGG.1B.772.DN	–	–	FGG.1B.130.LC	●
	D	76	7.6	6.7	7.5	7.1	FGG.1B.776.DN 3)	–	–	FGG.1B.132.LC	●
2B	M	21	2.1	–	2.0	1.5	FGG.0B.721.DN	FGG.2B.138.LN	FGG.2B.158.LN	FGG.2B.130.LC	●
	M	31	3.1	–	3.0	2.1	FGG.0B.731.DN	FGG.2B.138.LN	FGG.2B.158.LN	FGG.2B.130.LC	●
	M	42	4.2	–	4.0	3.1	FGG.0B.742.DN	FGG.2B.138.LN	FGG.2B.158.LN	FGG.2B.130.LC	●
	D	52	5.2	–	5.0	4.1	FGG.2B.752.DN	–	–	FGG.2B.130.LC	●
	D	62	6.2	–	6.0	5.1	FGG.2B.762.DN	–	–	FGG.2B.130.LC	●
	D	72	7.2	–	7.0	6.1	FGG.2B.772.DN	–	–	FGG.2B.130.LC	●
	D	82	8.2	–	8.0	7.1	FGG.2B.782.DN	–	–	FGG.2B.130.LC	●
	D	92	9.2	8.6	9.0	8.1	FGG.2B.792.DN	–	–	FGG.2B.130.LC	●
	D	99	9.9	8.6	9.7	9.1	FGG.2B.799.DN 3)	–	–	FGG.2B.132.LC	●
3B	M	52	5.2	–	5.0	4.1	FGG.1B.752.DN	FGG.3B.138.LN	FGG.3B.158.LN	FGG.3B.130.LC	●
	D	62	6.2	–	6.0	5.1	FGG.3B.762.DN	–	–	FGG.3B.130.LC	●
	D	72	7.2	–	7.0	6.1	FGG.3B.772.DN	–	–	FGG.3B.130.LC	●
	D	82	8.2	–	8.0	7.1	FGG.3B.782.DN	–	–	FGG.3B.130.LC	●
	D	92	9.2	–	9.0	8.1	FGG.3B.792.DN	–	–	FGG.3B.130.LC	●
	D	10	10.2	–	10.0	9.1	FGG.3B.710.DN	–	–	FGG.3B.130.LC	●
	D	11	11.2	10.2	11.0	10.1	FGG.3B.711.DN	–	–	FGG.3B.130.LC	●
	D	12	11.9	10.2	11.7	11.1	FGG.3B.712.DN 3)	–	–	FGG.3B.132.LC	●
4B	M	62	6.2	–	6.0	5.1	FGG.2B.762.DN	FGG.4B.138.LN	FGG.4B.158.LN	FGG.4B.130.LC	○
	M	72	7.2	–	7.0	6.1	FGG.2B.772.DN	FGG.4B.138.LN	FGG.4B.158.LN	FGG.4B.130.LC	○
	M	82	8.2	–	8.0	7.1	FGG.2B.782.DN	FGG.4B.138.LN	FGG.4B.158.LN	FGG.4B.130.LC	○
	M	92	9.2	8.6	9.0	8.1	FGG.2B.792.DN	FGG.4B.138.LN	FGG.4B.158.LN	FGG.4B.130.LC	○
	D	10	10.8	–	10.5	9.1	FGG.4B.710.DN	–	–	FGG.4B.130.LC	○
	D	12	12.3	–	12.0	10.6	FGG.4B.712.DN	–	–	FGG.4B.130.LC	○
	D	13	13.8	12.5	13.5	12.1	FGG.4B.713.DN	–	–	FGG.4B.130.LC	○
	D	15	15.3	12.5	15.0	13.6	FGG.4B.715.DN	–	–	FGG.4B.130.LC	○
	D	16	16.3	12.5	16.0	15.1	FGG.4B.716.DN 3)	–	–	FGG.4B.132.LC	○

Note:
1) For ordering collets separately.
2) For ordering an M type collet, a reducer and its reducing cone should also be ordered.
3) These collets cannot be used for connector models with nut for fitting a bend relief.

All dimensions are in millimeters.

Data Subject to Change

● Standard, typically 0-6 weeks delivery for quantities of 250 or less.
○ Non-standard product, contact LEMO USA, typically 6-12 weeks delivery for quantities of 250 or less.
Non-standard product is defined as any product which contains one or more components which are not standard.

D and M type collets

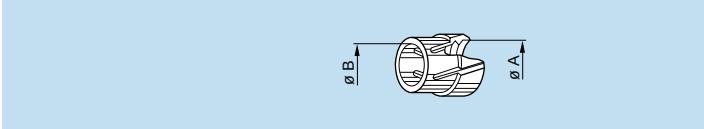

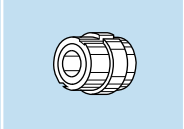
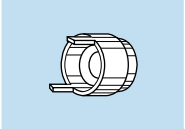
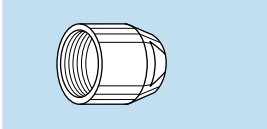

	Reference		Collet ø		Cable ø		Part number of the collet 1)	Part number of the reducer 2)	Part number of the reducing cone 2)	Part number of the collet nut	Avail-ability
	Type	ø	ø A	ø B	max.	min.					
5B	D	11	11.8	–	11.5	9.6	FGG.5B.711.DN	–	–	FGG.5B.130.LC	○
	D	13	13.8	–	13.5	11.6	FGG.5B.713.DN	–	–	FGG.5B.130.LC	○
	D	15	15.8	–	15.5	13.6	FGG.5B.715.DN	–	–	FGG.5B.130.LC	○
	D	17	17.8	–	17.5	15.6	FGG.5B.717.DN 3)	–	–	FGG.5B.130.LC	○
	D	19	19.8	–	19.5	17.6	FGG.5B.719.DN 3)	–	–	FGG.5B.130.LC	○
	D	21	21.8	–	21.5	19.6	FGG.5B.721.DN 3)	–	–	FGG.5B.130.LC	○
	D	23	23.8	21.8	23.5	21.6	FGG.5B.723.DN 3)	–	–	FGG.5B.130.LC	○
	D	25	25.3	21.8	25.0	23.6	FGG.5B.725.DN 3)	–	–	FGG.5B.132.LC	○

Note:
1) For ordering collet separately.
2) For ordering an M type collet, a reducer and its reducing cone should also be ordered.
3) These collets cannot be used for connector models with collet nut for fitting a bend relief.

Bend relief collet nut and bend relief

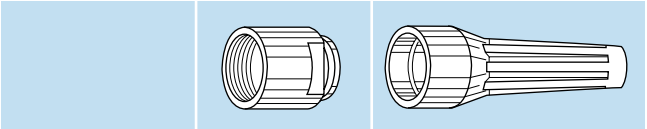

	Reference		Part number of the collet nut	Bend relief to be used 1)
	Type	ø		
00	D	17 to 35	FFM.00.131.LC	GMA.00.●●●.●● GMB.00.●●●.●●
0B	D	21 to 52	FFM.0B.130.LC	GMA.0B.●●●.●●
1B	M	27 and 31	FFM.1B.130.LC	GMA.1B.●●●.●●
	D	42 to 72	FFM.1B.130.LC	GMA.1B.●●●.●●
2B	M	21 and 31	FFM.2B.132.LC	GMA.0B.●●●.●●
	M	42	FFM.2B.130.LC	GMA.2B.●●●.●●
	D	52 to 92	FFM.2B.130.LC	GMA.2B.●●●.●●

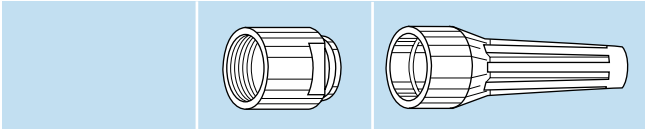

	Reference		Part number of the collet nut	Bend relief to be used 1)
	Type	ø		
3B	M	52	FFM.3B.131.LC	GMA.1B.●●●.●●
	D	62 to 11	FFM.3B.130.LC	GMA.3B.●●●.●●
4B	M	62 and 72	FFM.4B.132.LC	GMA.2B.●●●.●●
	M	82 and 92	FFM.4B.130.LC	GMA.4B.●●●.●●
	D	10 to 15	FFM.4B.130.LC	GMA.4B.●●●.●●
5B	D	11 to 15	FFM.5B.130.LC	GMA.4B.●●●.●●

Note: 1) The bend relief is to be ordered separately (see pages 137).

All dimensions are in millimeters.

Variant

Color of the bridge plug shells and connectors shell made of plastic material

The «variant» position of the reference is used to specify the color of the shell according to the table below.

Ref.	Color	Ref.	Color	Ref.	Color
A	blue	J	yellow	S	orange
B1)	white	M	brown	V	green
F2)	cream	N	black		
G1)	grey	R	red		

Note:
1) PSU connector shells are only available in white or grey colors.
2) PPSU connector shells are only available in cream colors.
The variant position is also used to indicate epoxy filling of watertight and vacumm-tight receptacle models, the reference P is used.

Anodized color for Aluminum

The «variant» position of the reference is used to specify the anodized color according to the table below.

Part number for connector with standard collet nut

Ref.	Anodized color	Ref.	Anodized color
A	blue	R	red
J	yellow	T	natural
N	black	V	green

Part number for connector with collet nut for bend relief

Ref.	Anodized color
L	black
X	natural

Note: Other anodizing colors are available for connectors with collet nut for bend relief. Please consult us.

● Standard, typically 0-6 weeks delivery for quantities of 250 or less.
○ Non-standard product, contact LEMO USA, typically 6-12 weeks delivery for quantities of 250 or less.
Non-standard product is defined as any product which contains one or more components which are not standard.

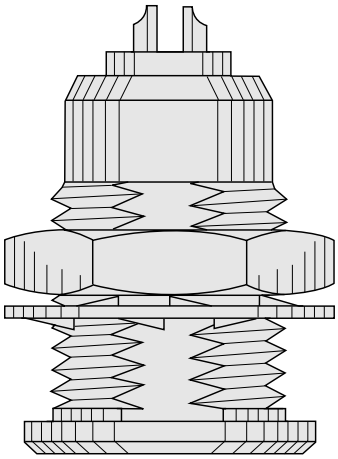

• S Series Connectors

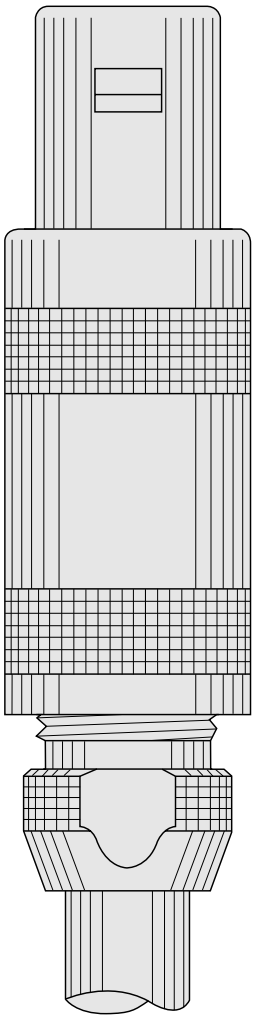

S Series Connectors

S series connectors have the following main features:
– security of the push-pull self-latching system
– single contact types transmitting current up to 230 A and multicontact types with up to 106 contacts
– hybrid types (multicontact, high voltage, low voltage, coaxial)
– solder or printed circuit contacts (straight or elbow)
– polarization by stepped insert (half-moon) fitted with male and female contacts
– 360° screening for full EMC shielding
– wide range of models satisfying most applications.

Interconnections

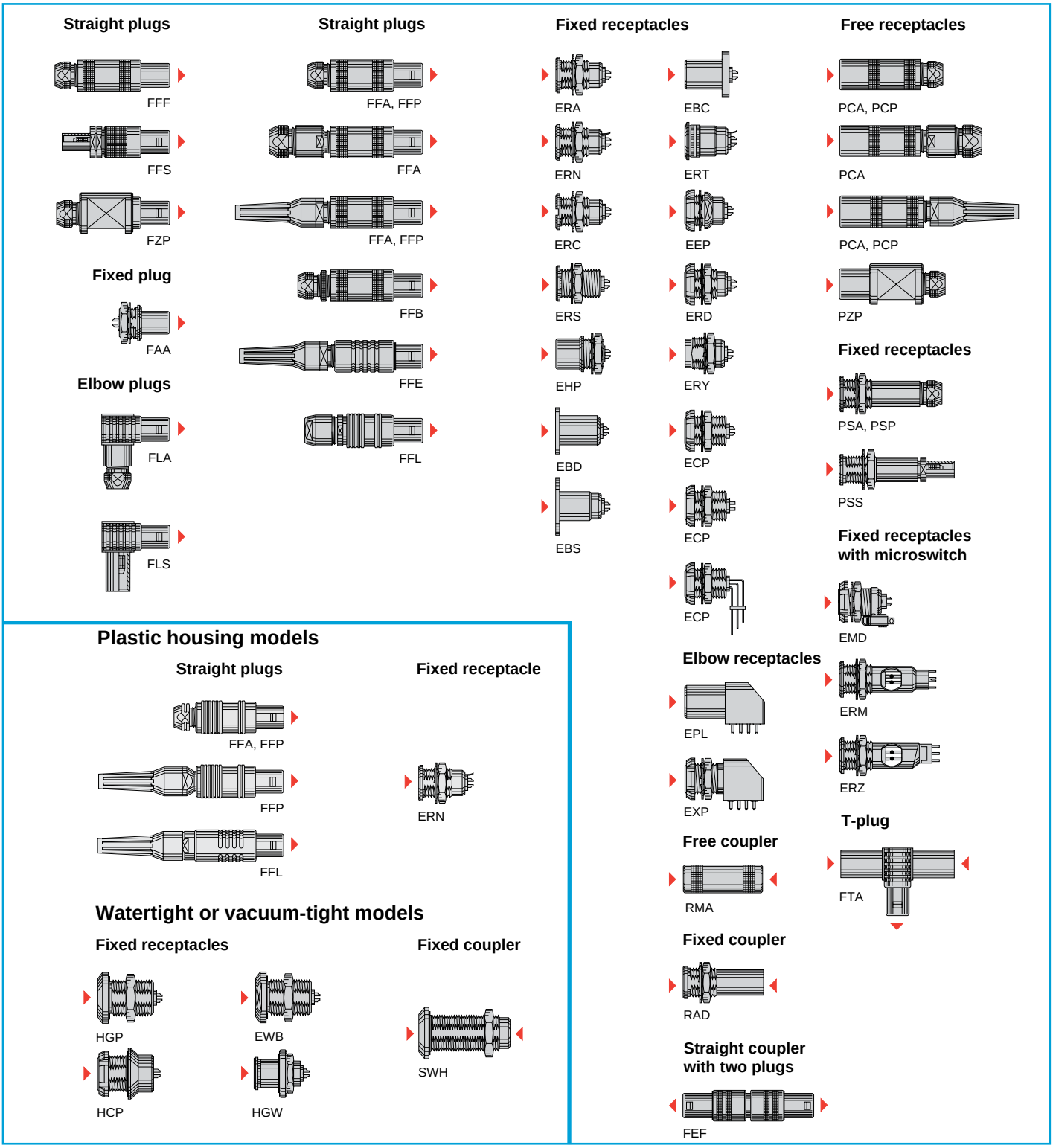

Data Subject to Change

Model Description

EBC Fixed receptacle with square flange, protruding shell and screw fixing
EBD Fixed receptacle with square flange and screw fixing
EBS Fixed receptacle with round flange and screw fixing
ECP Fixed receptacle with two nuts, long threaded shell (back panel mounting)
ECP Fixed receptacle with two nuts, long threaded shell, with straight contact for printed circuit (back panel mounting)
ECP Fixed receptacle with two nuts, long threaded shell, with elbow (90°) contacts for printed circuit (back panel mounting)
EEP Fixed receptacle, nut fixing (back panel mounting)
EHP Fixed receptacle, nut fixing, protruding shell
EMD Fixed receptacle with two nuts and microswitch (back panel mounting)
EPL Elbow (90°) receptacle for printed circuit
ERA Fixed receptacle, nut fixing
ERC Fixed receptacle, nut fixing with slot in the flange
ERD Fixed receptacle with two nuts (back panel mounting)
ERM Fixed receptacle, nut fixing with microswitch
ERN Fixed receptacle, nut fixing, with grounding tab
ERN Fixed receptacle, nut fixing, with grounding tab, PEEK or POM outer shell
ERS Fixed receptacle, nut fixing, long threaded shell, without flats
ERT Fixed receptacle, force fit, with grounding tab
ERY Fixed receptacle, protruding shell, screw fixing on the panel (back panel mounting)
ERZ Fixed receptacle, nut fixing with double microswitch and printed circuit contacts
EWB Fixed receptacle, nut fixing, with two flats on the flange, watertight or vacuum-tight
EXP Elbow (90°) receptacle for printed circuit with two nuts (back panel mounting)
FAA Fixed plug non-latching, nut fixing
FEF Straight coupler with two plugs and front seal
FFA Straight plug, cable collet
FFA Straight plug with oversize cable collet
FFA Straight plug, cable collet and nut for fitting a bend relief
FFA Straight plug, cable collet, PEEK or POM outer shell
FFB Straight plug, cable collet and safety locking ring
FFE Straight plug, cable collet, front seal and nut for fitting a bend relief
FFF Straight plug, non-latching, cable collet
FFL Straight plug, flats on latch sleeve, cable collet and inner anti-rotating device
FFL Straight plug, cable collet, with PSU and PPSU outer shell, inner anti-rotating device and nut for fitting a bend relief
FFP Straight plug, cable collet and inner anti-rotating device
FFP Straight plug, cable collet and inner anti-rotating device and nut for fitting a bend relief
FFP Straight plug, cable collet, PEEK or POM outer shell and inner anti-rotating device
FFP Straight plug, cable collet, PEEK or POM outer shell, inner anti-rotating device and nut for fitting a bend relief
FFS Straight plug for cable crimping
FLA Elbow (90°) plug, cable collet
FLS Elbow (90°) plug for cable crimping
FTA T-plug with two in line receptacles
FZP Straight plug for remote handling, cable collet and inner anti-rotating device
HCP Fixed receptacle, nut fixing, watertight or vacuum-tight (back panel mounting)
HGP Fixed receptacle, nut fixing, watertight or vacuum-tight
HGW Fixed receptacle, nut fixing, with back washer, watertight or vacuum-tight
PCA Free receptacle, cable collet
PCA Free receptacle, with oversize cable collet
PCA Free receptacle, cable collet and nut for fitting a bend relief
PCP Free receptacle, cable collet and inner anti-rotating device
PCP Free receptacle, cable collet and inner anti-rotating device and nut for fitting a bend relief
PSA Fixed receptacle, nut fixing, cable collet
PSP Fixed receptacle, nut fixing, cable collet and inner anti-rotating device
PSS Free receptacle, nut fixing for cable crimping
PZP Free receptacle for remote handling, cable collet and inner anti-rotating device
RAD Fixed coupler, nut fixing
RMA Free coupler
SWH Fixed coupler, nut fixing, watertight or vacuum-tight

Part Section Showing Internal Components

Fixed receptacle

1. outer shell
2. grounding crown
3. retaining ring
4. hexagonal nut
5. locking washer
6. insulator
7. male contact
8. female contact

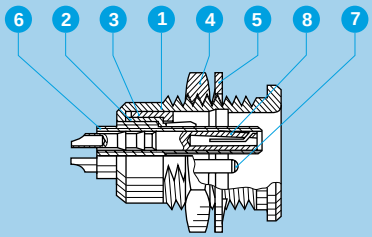

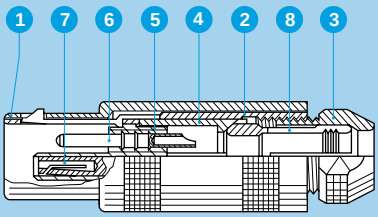

Straight plug

1. outer shell
2. latch sleeve
3. collet nut
4. center-piece
5. insulator
6. male contact
7. female contact
8. collet

Technical Characteristics

Mechanical and Climatic

Characteristics	Value	Standard
Endurance	> 5000 cycles	IEC 60512-5 test 9a
Humidity	up to 95% at 140° F	
Temperature range[1)]	-67° F, +482° F	
Resistance to vibrations	10-2000 Hz, 15 g	IEC 60512-4 test 6d
Shock resistance	100 g, 6 ms	IEC 60512-4 test 6c
Salt spray corrosion test	> 144h	IEC 60512-6 test 11f
Protection index (mated)	IP 50	IEC 60529
Climatic category[1)]	55/175/21	IEC 60068-1

Electrical

Characteristics		Value	Standard
Shielding efficiency	at 10 MHz	> 75 dB	IEC 60169-1-3
	at 1 GHz	> 40 dB	IEC 60169-1-3

Note:
The various tests have been carried out with FFA and ERA connector pairs, with chrome-plated brass shell and PEEK insulator.
Detailed electrical characteristics, as well as materials and treatment are presented on page 5.
[1)] For watertight or vacuum-tight models: see page 76.

Available Models (series and types)

Model	Single contact							Multicontact						
	00	0S	1S	2S	3S	4S	5S	0S	1S	2S	3S	4S	5S	6S
EBC			●	●	●		●		●	●	●		●	
EBD				●						●				
EBS			●						●					
ECP		●	●	●	●			●	●	●	●			
ECP 1)								●	●	●	●			
EEP				●						●				
EHP		●	●		●			●	●		●			
EMD										●				
EPL		●						●	●					
ERA	●	●	●	●	●	●	●	●	●	●	●	●	●	●
ERC	●	●	●					●	●					
ERD		●	●	●	●	●		●	●	●	●	●		
ERM									●					
ERN		●	●	●	●			●	●	●	●			
ERN 2)	●	●	●	●	●			●	●	●	●			
ERS		●						●						
ERT			●						●					
ERY				●						●				
ERZ									●					
EWB			●	●				●	●	●		●		
EXP								●	●					
FAA	●	●	●	●	●	●		●	●	●	●	●	●	●
FEF													●	
FFA	●	●	●	●	●	●	●	●	●	●	●	●	●	●
FFA 3)	●	●	●	●	●	●		●	●	●	●	●		
FFA 4)	●	●	●	●	●	●		●	●	●	●	●		
FFA 6)	●													
FFB			●	●	●			●	●	●	●			
FFE	●	●	●	●	●			●	●	●	●			

Model	Single contact							Multicontact						
	00	0S	1S	2S	3S	4S	5S	0S	1S	2S	3S	4S	5S	6S
FFF	●	●	●	●				●	●	●				
FFL										●				
FFL 5)										●				
FFP		●	●	●	●	●		●	●	●	●	●		
FFP 4)		●	●	●	●	●		●	●	●	●	●		
FFP 2)		●	●	●	●			●	●	●	●			
FFP 6)		●	●	●	●			●	●	●	●			
FFS	●													
FLA	●	●	●	●	●	●		●	●	●	●	●	●	●
FLS	●													
FTA	●	●	●		●			●	●					
FZP			●	●	●	●	●		●	●	●	●	●	●
HCP			●	●		●			●	●		●		
HGP		●	●	●	●	●	●	●	●	●	●	●	●	●
HGW								●	●					
PCA	●	●	●	●	●	●		●	●	●	●	●	●	●
PCA 3)	●	●	●	●	●	●		●	●	●	●	●		
PCA 4)	●	●	●	●	●	●		●	●	●	●	●		
PCP		●	●	●	●	●		●	●	●	●	●		
PCP 4)		●	●	●	●	●		●	●	●	●	●		
PSA	●	●	●	●	●	●		●	●	●	●	●	●	●
PSP		●	●	●	●	●		●	●	●	●	●		
PSS	●													
PZP			●	●	●				●	●	●			
RAD	●	●	●	●	●	●		●	●	●	●	●	●	
RMA	●	●	●	●	●	●		●	●	●	●	●	●	
SWH		●	●	●	●			●	●	●	●	●	●	●

Model	Hybrid						
	00	0S	1S	2S	3S	4S	5S
EBC					●		●
EBD							
EBS							
ECP					●		
ECP 1)							
EEP							
EHP					●		
EMD							
EPL							
ERA					●	●	●
ERC							
ERD						●	
ERM							
ERN					●		
ERN 2)							
ERS							
ERT							
ERY							
ERZ							

Model	Hybrid						
	0S	1S	2S	3S	4S	5S	6S
EWB							
EXP							
FAA				●	●	●	●
FEF							
FFA				●	●	●	●
FFA 3)				●	●	●	
FFA 4)				●	●	●	
FFA 6)							
FFB				●			
FFE				●			
FFF							
FFL							
FFL 5)							
FFP				●	●	●	
FFP 4)						●	
FFP 2)							
FFP 6)							
FFS							
FLA				●	●	●	●

Model	Hybrid						
	00	0S	1S	2S	3S	4S	5S
FLS							
FTA							
FZP					●	●	●
HCP							
HGP							
HGW							
PCA				●	●	●	
PCA 3)				●	●	●	
PCA 4)							
PCP				●	●	●	
PCP 4)							
PSA				●	●	●	●
PSP					●	●	
PSS							
PZP					●		
RAD						●	
RMA							
SWH							

Note:
1) With elbow (90°) printed circuit contact.
2) With PEEK or POM outer shell.
3) With oversize collet.
4) With nut for fitting a bend relief.
5) With PSU outer shell.
6) With PEEK or POM outer shell.
● = available models by series and types

Data Subject to Change

Part Number Example

Straight plug with cable collet

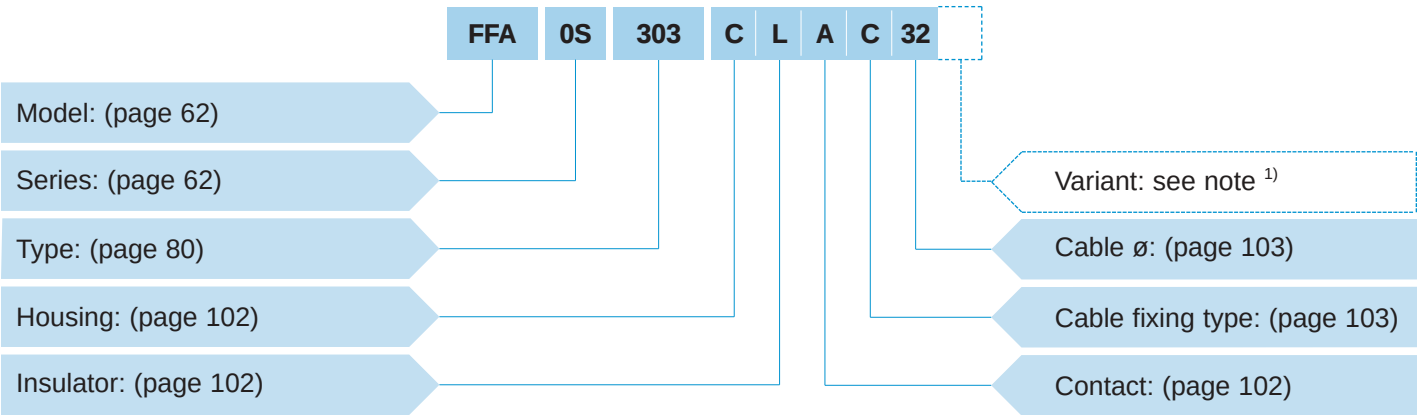

FFA.0S.303.CLAC32 = straight plug with cable collet, 0S series, multicontact type with three contacts, outer shell in chrome-plated brass, PEEK insulator, two male and one female solder contacts, C type collet for a 3.2 mm diameter cable.

Fixed receptacle

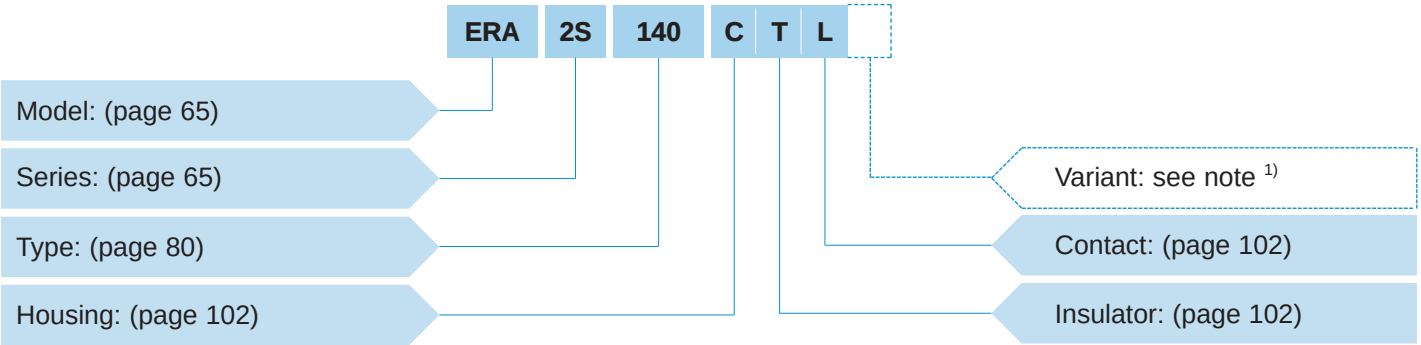

ERA.2S.140.CTL = fixed receptacle, nut fixing, 2S series, single contact type ø 4.0 mm contacts, chrome-plated brass outer shell, PTFE insulator, female solder contact.

Fixed coupler

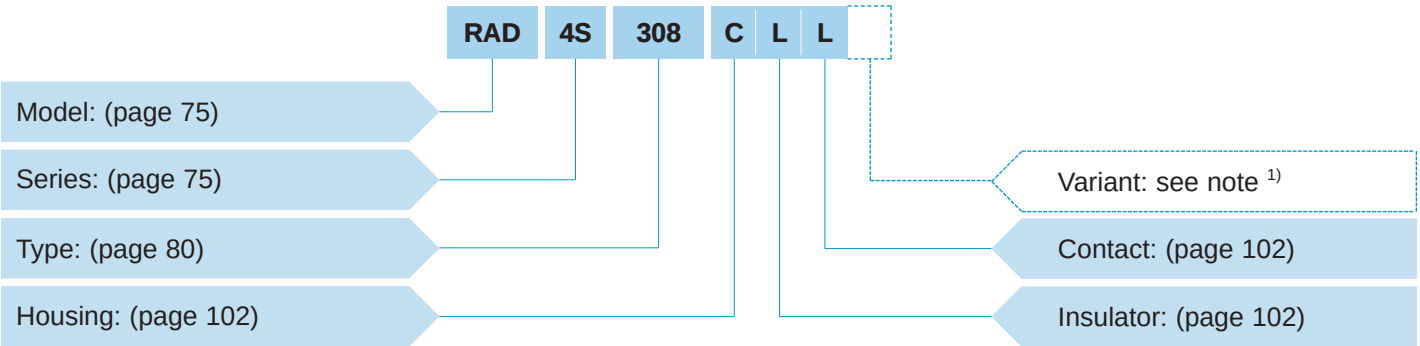

RAD.4S.308.CLL = straight coupler, nut fixing, 4S series, multicontact type with eight contacts, chrome-plated brass outer shell, PEEK insulator, four female and four male contacts each end.

Note: 1) The «Variant» position of the part number is used to specify either the presence of a nut for fitting a bend relief, or the anodized color of the aluminium housings or the color of housings using plastic material.
For models with collet nut for fitting a bend relief, a «Z» should be indicated and a bend relief can be ordered separately as indicated in the «Accessories» section. An order for a connector with bend relief should thus include two part numbers.
For the various housings available in colors, the corresponding letter in the part number for the color is indicated on page 110.
For the watertight models of receptacle, the letter «P» is used; for the vacuum-tight models of receptacle the letters «PV» shall be indicated.

Models

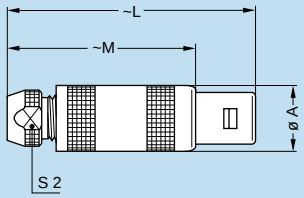

FFA Straight plug, cable collet

Reference		Dimensions (mm)				Availability
Model	Series	A	L	M	S2	
FFA	00	6.4	26.0	18.0	4.5	●
FFA	0S	9.0	34.5	24.5	6.5	●
FFA	1S	12.0	42.5	31.5	8.5	●
FFA	2S	14.8	52.0	40.0	11.0	●
FFA	3S	17.8	61.0	46.0	14.0	●
FFA	4S	24.8	77.0	59.0	19.0	○
FFA	5S	35.1	103.0	78.0	29.0	○
FFA	6S	46.0	106.0	81.0	38.0	○

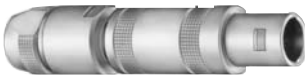

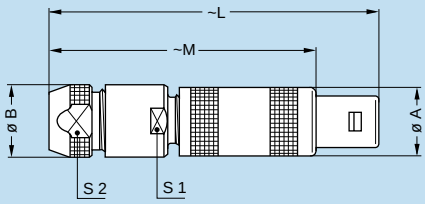

FFA Straight plug with oversize cable collet

Reference		Dimensions (mm)						Avail-ability
Model	Series	A	B	L	M	S1	S2	
FFA	00	6.4	8.0	34.0	26.0	7.0	6.5	○
FFA	0S	9.0	10.0	45.5	35.5	9.0	8.5	○
FFA	1S	12.0	13.0	57.0	46.0	12.0	11.0	○
FFA	2S	14.8	18.0	67.0	55.0	14.0	14.0	○
FFA	3S	17.8	21.0	85.0	70.0	19.0	19.0	○
FFA	4S	24.8	31.8	107.0	89.0	28.5	29.0	○
FFA	5S	35.1	41.8	138.0	113.0	37.5	38.0	○

Note: The fitting of oversize collets onto this model allows them to be fitted to the cables that can be accommodated by the next housing size up.

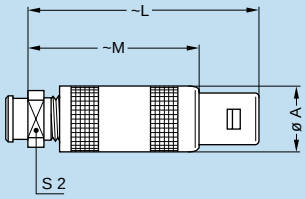

FFA Straight plug, cable collet and nut for fitting a bend relief

Reference		Dimensions (mm)				Availability
Model	Series	A	L	M	S2	
FFA	00	6.4	26.0	18.0	6	●
FFA	0S	9.0	34.5	24.5	7	●
FFA	1S	12.0	42.5	31.5	9	●
FFA	2S	14.8	52.0	40.0	12	●
FFA	3S	17.8	61.0	46.0	14	●
FFA	4S	24.8	77.0	59.0	20	○

Note: The bend relief must be ordered separately (see page 137).

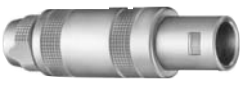

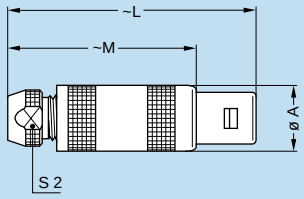

FFP Straight plug, cable collet and inner anti-rotating device

Reference		Dimensions (mm)				Availability
Model	Series	A	L	M	S2	
FFP	0S	9.0	34.5	24.5	6.5	○
FFP	1S	12.0	42.5	31.5	8.5	○
FFP	2S	14.8	52.0	40.0	11.0	○
FFP	3S	17.8	61.0	46.0	14.0	○
FFP	4S	24.8	77.0	59.0	19.0	○

● Standard, typically 0-6 weeks delivery for quantities of 250 or less.
○ Non-standard product, contact LEMO USA, typically 6-12 weeks delivery for quantities of 250 or less.
Non-standard product is defined as any product which contains one or more components which are not standard.

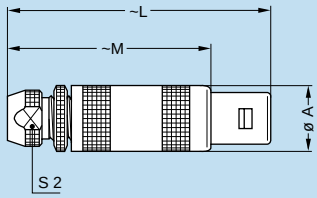

FFB Straight plug, cable collet and safety locking ring

Reference		Dimensions (mm)				Availability
Model	Series	A	L	M	S2	
FFB	0S	9.0	36.8	26.8	6.5	○
FFB	1S	12.0	45.0	34.0	8.5	○
FFB	2S	14.8	55.5	43.5	11.0	○
FFB	3S	17.8	65.0	50.0	14.0	○

Note: Not available with nut for fitting a bend relief.

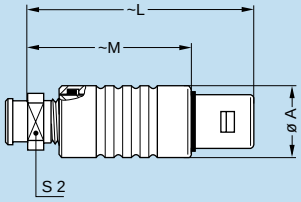

FFE Straight plug, cable collet, front seal and nut for fitting a bend relief (protected to IP54 when mated)

Reference		Dimensions (mm)				Availability
Model	Series	A	L	M	S2	
FFE	00	7.4	26.0	18.0	6	○
FFE	0S	10.0	34.5	24.5	7	○
FFE	1S	13.0	42.5	31.5	9	○
FFE	2S	16.0	52.0	40.0	12	○
FFE	3S	19.0	61.0	46.0	14	○

Note: The bend relief must be ordered separately (see page 137).

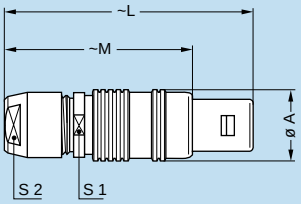

FFL Straight plug, flats on latch sleeve, cable collet and inner anti-rotating device

Reference		Dimensions (mm)					Availability
Model	Series	A	L	M	S1	S2	
FFL	2S	15.0	49.0	37.0	13	12	○

Note: This model is fitted with a «D or M» type collet system (see page 158). It is also adapted for crimp contacts.

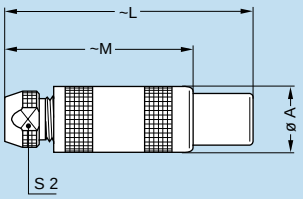

FFF Straight plug, non-latching, cable collet

Reference		Dimensions (mm)				Availability
Model	Series	A	L	M	S2	
FFF	00	6.4	26.0	18.0	4.5	○
FFF	0S	9.0	34.5	24.5	6.5	○
FFF	1S	12.0	42.5	31.5	8.5	○
FFF	2S	14.8	52.0	40.0	11.0	○

● Standard, typically 0-6 weeks delivery for quantities of 250 or less.
○ Non-standard product, contact LEMO USA, typically 6-12 weeks delivery for quantities of 250 or less.
Non-standard product is defined as any product which contains one or more components which are not standard.

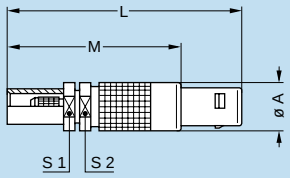

FFS Straight plug for cable crimping

Reference		Dimensions (mm)					Availability
Model	Series	A	L	M	S1	S2	
FFS	00	6.4	31	23	5.5	5.5	●

Note: Model available only with crimp backnut E31 similar to 00.250 series

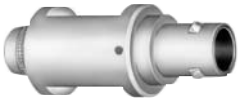

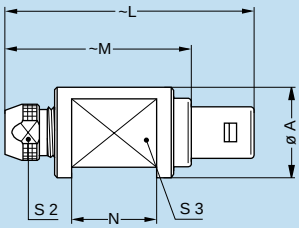

FZP Straight plug for remote handling, cable collet and inner anti-rotating device

Reference		Dimensions (mm)						Avail-ability
Model	Series	A	L	M	N	S2	S3	
FZP	1S	16	42.5	31.5	15	8.5	12	○
FZP	2S	24	52.0	40.0	21	11.0	18	○
FZP	3S	24	61.0	46.0	24	14.0	18	○
FZP	4S	35	77.0	59.0	30	19.0	28	○
FZP	5S	43	103.0	78.0	44	29.0	35	○
FZP	6S	60	106.0	81.0	44	38.0	50	○

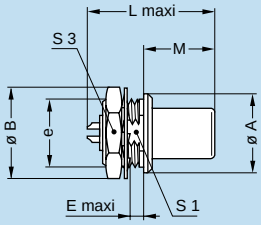

FAA Fixed plug non-latching, nut fixing

Reference		Dimensions (mm)									Avail-ability
Model	Series	A	B	e	E	L	L[1)]	M	S1	S3	
FAA	00	8	10.3	M7x0.5	2.0	–	15.5	9.0	6.3	9	○
FAA	0S	10	12.5	M9x0.6	2.0	18.5	18.0	11.2	8.2	11	○
FAA	1S	14	16.0	M12x1.0	2.5	22.5	21.7	12.5	10.5	14	○
FAA	2S	18	19.5	M15x1.0	4.0	25.0	25.3	13.8	13.5	17	○
FAA	3S	22	25.2	M18x1.0	4.0	31.0	29.0	17.0	16.5	22	○
FAA	4S	28	32.0	M25x1.0	2.5	35.5	39.0	20.5	23.5	30	○
FAA	5S	40	40.0	M35x1.0	2.5	45.0	–	28.0	33.5	–	○
FAA	6S	54	54.0	M48x1.5	2.5	45.0	–	28.0	–	–	○

Panel cut-out: **P1** Panel cut-out: **P2** 6S series

Note: 1) Single contact model.

● Standard, typically 0-6 weeks delivery for quantities of 250 or less.
○ Non-standard product, contact LEMO USA, typically 6-12 weeks delivery for quantities of 250 or less.
Non-standard product is defined as any product which contains one or more components which are not standard.

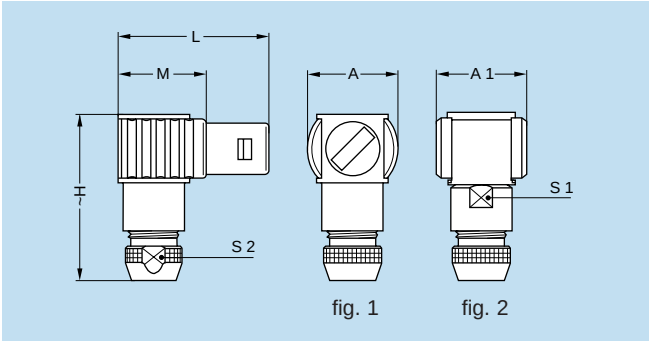

FLA Elbow (90°) plug, cable collet

Reference		Dimensions (mm)							Avail-ability
Model	Series	A	A1	H	L	M	S1	S2	
FLA	00	9	–	16.0	17.5	9.5	–	4.5	○
FLA	0S	13	13	24.5	23.0	13.0	8	6.5	○
FLA	1S	16	16	28.5	26.5	15.5	10	8.5	○
FLA	2S	20	20	37.0	31.0	19.0	13	11.0	○
FLA	3S	21	21	44.0	38.5	23.5	15	14.0	○
FLA	4S	28	28	56.0	49.0	31.0	20	19.0	○
FLA	5S	–	37	76.5	65.0	40.0	30	29.0	○
FLA	6S	–	48	94.0	81.0	56.0	40	38.0	○

Note:
Fig. 1 is used for the single contact type, fig. 2 is used for the multicontact type.

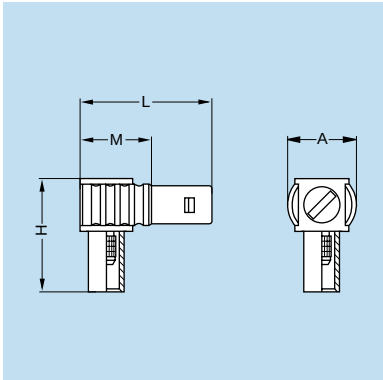

FLS Elbow (90°) plug for cable crimping

Reference		Dimensions (mm)				Availability
Model	Series	A	H	L	M	
FLS	00	9	16	17.5	9.5	○

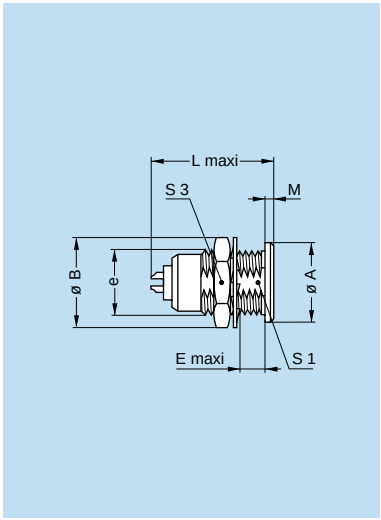

ERA Fixed receptacle, nut fixing

Reference		Dimensions (mm)									Avail-ability
Model	Series	A	B	e	E	L	L[1)]	M	S1	S3	
ERA	00	8	10.3	M7x0.5	5.5	–	14.5	1.0	6.3	9	●
ERA	0S	10	12.5	M9x0.6	7.0	17.5	18.0	1.2	8.2	11	●
ERA	1S	14	16.0	M12x1.0	7.5	20.2	20.5	1.5	10.5	14	●
ERA	2S	18	19.5	M15x1.0	8.5	24.5	23.5	1.8	13.5	17	●
ERA	3S	22	25.2	M18x1.0	11.5	29.0	27.5	2.0	16.5	22	●
ERA	4S	28	32.0	M25x1.0	12.0	34.0	33.5	2.5	23.5	30	○
ERA	5S	40	40.0	M35x1.0	15.5	45.0	78.5	3.0	33.5	–	○
ERA	6S	54	54.0	M48x1.5	16.0	45.0	–	3.5	45.5	–	○

Panel cut-out: **P1**

Note: [1)] Single contact model.

Note: The 5S series is delivered with a tapered washer and a round nut.
The 6S series is delivered without a locking washer and with a round nut.

● Standard, typically 0-6 weeks delivery for quantities of 250 or less.
○ Non-standard product, contact LEMO USA, typically 6-12 weeks delivery for quantities of 250 or less.
Non-standard product is defined as any product which contains one or more components which are not standard.

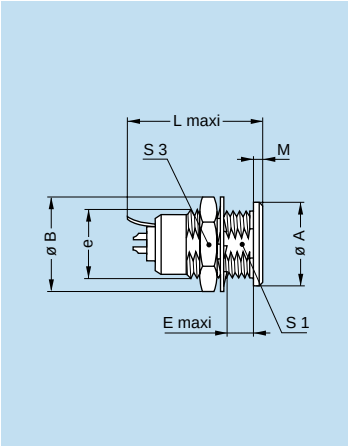

ERN Fixed receptacle, nut fixing, with grounding tab

Reference		Dimensions (mm)									Avail-ability
Model	Series	A	B	e	E	L	L[1)]	M	S1	S3	
ERN	0S	10	12.5	M9x0.6	7.0	19.3	19.3	1.2	8.2	11	○
ERN	1S	14	16.0	M12x1.0	7.5	22.4	22.4	1.5	10.5	14	○
ERN	2S	18	19.5	M15x1.0	8.5	26.3	26.3	1.8	13.5	17	○
ERN	3S	22	25.2	M18x1.0	11.5	29.8	29.8	2.0	16.5	22	○

Panel cut-out: **P1**

Note: 1) Single contact model.

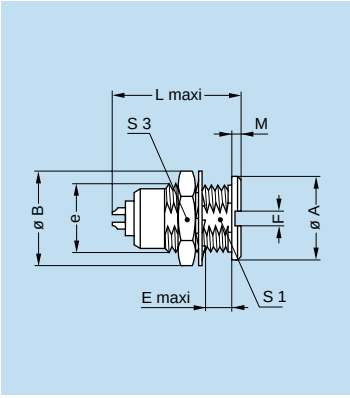

ERC Fixed receptacle, nut fixing with slot in the flange

Reference		Dimensions (mm)										Avail-ability
Model	Series	A	B	e	E	F	L	L[1)]	M	S1	S3	
ERC	00	8	10.3	M7x0.5	5.5	1.6	–	14.5	1.0	6.3	9	○
ERC	0S	10	12.5	M9x0.6	7.0	2.0	17.5	18.0	1.2	8.2	11	○
ERC	1S	14	16.0	M12x1.0	7.5	2.5	20.2	20.5	1.5	10.5	14	○

Panel cut-out: **P1**

Note: 1) Single contact model.

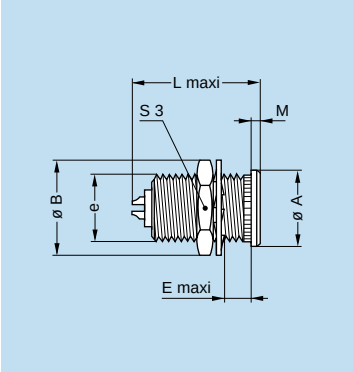

ERS Fixed receptacle, nut fixing, long threaded shell, without flats

Reference		Dimensions (mm)								Avail-ability
Model	Series	A	B	e	E	L	L[1)]	M	S3	
ERS	0S	10	12.5	M9x0.6	10.5	17.5	18.0	1.2	11	○

Panel cut-out: **P2**

Note: 1) Single contact model.

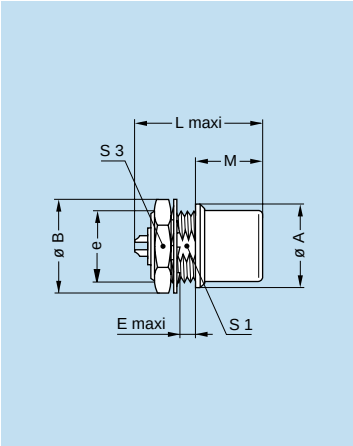

EHP Fixed receptacle, nut fixing, protruding shell

Reference		Dimensions (mm)									Avail-ability
Model	Series	A	B	e	E	L	L[1)]	M	S1	S3	
EHP	0S	10	12.5	M9x0.6	2.5	17.5	18.0	12.5	8.2	11	○
EHP	1S	14	16.0	M12x1.0	3.5	20.2	20.5	12.0	–	14	○
EHP	3S	22	25.2	M18x1.0	4.0	29.0	29.0	18.7	–	22	○

Panel cut-out: **P2** Panel cut-out: **P1** 0S series

Note: 1) Single contact model.

Data Subject to Change

● Standard, typically 0-6 weeks delivery for quantities of 250 or less.
○ Non-standard product, contact LEMO USA, typically 6-12 weeks delivery for quantities of 250 or less.
Non-standard product is defined as any product which contains one or more components which are not standard.

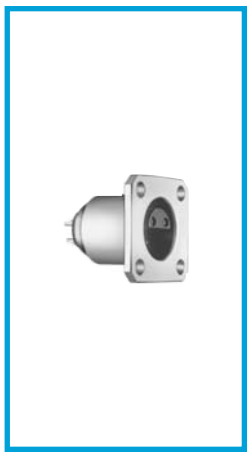

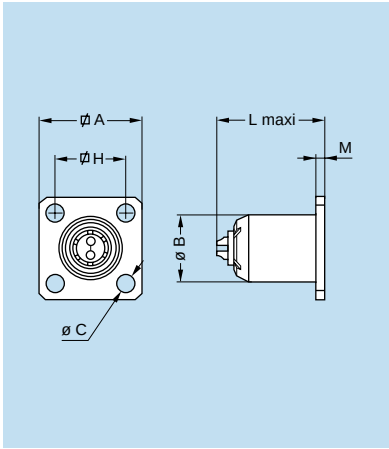

EBD Fixed receptacle with square flange and screw fixing

Reference		Dimensions (mm)							Avail-ability
Model	Series	A	B	C	H	L	L[1)]	M	
EBD	2S	22	15	3.2	15.5	24.5	26	2	○

Panel cut-out: **P6**

Note: [1)] Single contact model.

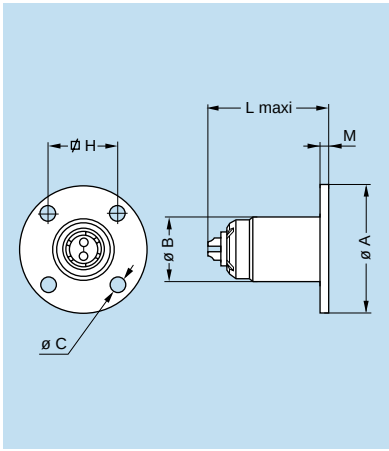

EBS Fixed receptacle with round flange and screw fixing

Reference		Dimensions (mm)							Avail-ability
Model	Series	A	B	C	H	L	L[1)]	M	
EBS	1S	22	11	2.5	12.4	20.2	20.5	1.5	○

Panel cut-out: **P7**

Note: [1)] Single contact model.

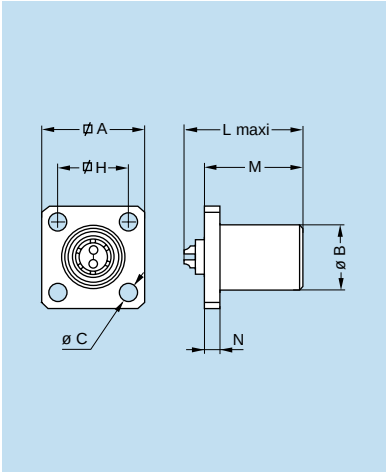

EBC Fixed receptacle with square flange, protruding shell and screw fixing

Reference		Dimensions (mm)								Avail-ability
Model	Series	A	B	C	H	L	L[1)]	M	N	
EBC	1S	18	11.5	3.2	12.7	20.2	20.5	16.5	2.8	○
EBC	2S	22	15.0	3.2	15.5	24.5	23.5	18.5	4.4	○
EBC	3S	25	18.0	3.2	18.0	29.0	27.5	23.5	3.0	○
EBC	5S	45	40.0	4.3	36.8	45.0	78.5	15.0	4.0	○

Panel cut-out: **P6**

Note: [1)] Single contact model.

● Standard, typically 0-6 weeks delivery for quantities of 250 or less.
○ Non-standard product, contact LEMO USA, typically 6-12 weeks delivery for quantities of 250 or less.
Non-standard product is defined as any product which contains one or more components which are not standard.

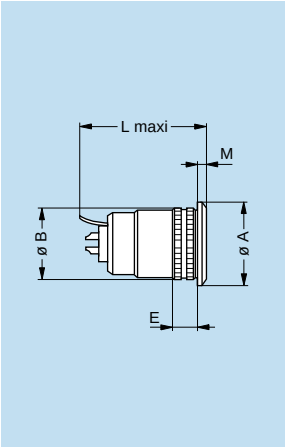

ERT Fixed receptacle, force fit, with grounding tab

Reference		Dimensions (mm)						Availability
Model	Series	A	B	E	L	L[1)]	M	
ERT	1S	14	11.98	3.5	22.4	22.4	1.5	○

Panel cut-out: **P5**

Note: 1) Single contact model.

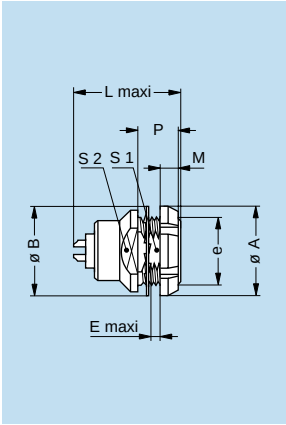

EEP Fixed receptacle, nut fixing (back panel mounting)

Reference		Dimensions (mm)										Avail-ability
Model	Series	A	B	e	E	L	L[1)]	M	P	S1	S2	
EEP	2S	20	19.5	M15x1.0	3.5	24.5	23.5	3.5	9	13.5	15	○

Panel cut-out: **P1**

Note: 1) Single contact model.

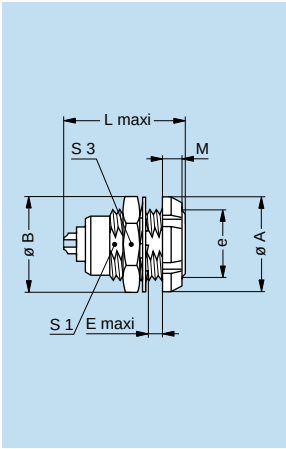

ERD Fixed receptacle with two nuts (back panel mounting)

Reference		Dimensions (mm)									Avail-ability
Model	Series	A	B	e	E	L	L[1)]	M	S1	S3	
ERD	0S	12	12.5	M9x0.6	5.5	17.5	18.0	2.5	8.2	11	○
ERD	1S	16	16.0	M12x1.0	6.0	20.2	20.5	3.5	10.5	14	○
ERD	2S	20	19.5	M15x1.0	6.5	24.5	23.5	3.5	13.5	17	○
ERD	3S	24	25.2	M18x1.0	9.0	29.0	27.5	4.5	16.5	22	○
ERD	4S	30	32.0	M25x1.0	10.0	34.0	33.5	4.5	23.5	30	○

Panel cut-out: **P1**

Note: 1) Single contact model.
The 3S and 4S series are delivered with a conical nut.

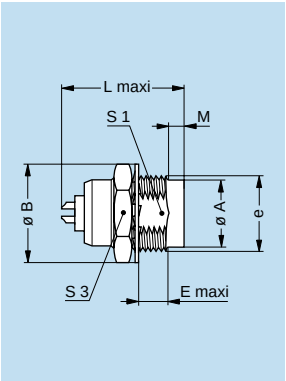

ERY Fixed receptacle, protruding shell, screw fixing on the panel (back panel mounting)

Reference		Dimensions (mm)									Avail-ability
Model	Series	A	B	e	E	L	L[1)]	M	S1	S3	
ERY	2S	13.5	19.5	M15x1.0	6	24.5	26	3.1	13.5	17	○

Panel cut-out: **P1**

Note: 1) Single contact model.

Data Subject to Change

● Standard, typically 0-6 weeks delivery for quantities of 250 or less.
○ Non-standard product, contact LEMO USA, typically 6-12 weeks delivery for quantities of 250 or less.
Non-standard product is defined as any product which contains one or more components which are not standard.

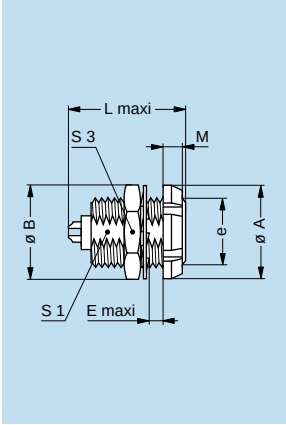

ECP Fixed receptacle with two nuts, long threaded shell
(back panel mounting)

Reference		Dimensions (mm)									Avail-ability
Model	Series	A	B	e	E	L	L[1)]	M	S1	S3	
ECP	0S	12	12.5	M9x0.6	8.5	17.5	18.5	2.5	8.2	11	○
ECP	1S	16	16.0	M12x1.0	10.0	20.2	21.5	3.5	10.5	14	○
ECP	2S	20	19.5	M15x1.0	11.0	24.5	26.0	3.5	13.5	17	○
ECP	3S	24	25.2	M18x1.0	14.0	29.0	30.0	4.5	16.5	22	○

Panel cut-out: **P1**

Note: [1)] Single contact model.
The 3S series is delivered with a conical nut.

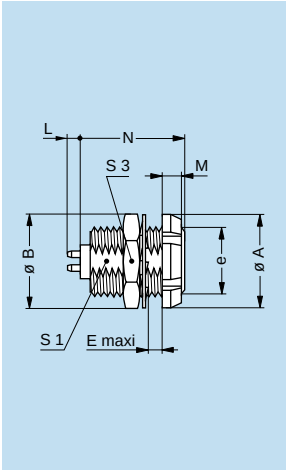

ECP Fixed receptacle with two nuts, long threaded shell, with straight contact for printed circuit
(back panel mounting)

Reference		Dimensions (mm)								Availability
Model	Series	A	B	e	E	M	N	S1	S3	
ECP	0S	12	12.5	M9x0.6	8.5	2.5	15.0	8.2	11	○
ECP	1S	16	16.0	M12x1.0	10.0	3.5	17.5	10.5	14	○
ECP	2S	20	19.5	M15x1.0	11.0	3.5	20.0	13.5	17	○
ECP	3S	24	25.2	M18x1.0	14.0	4.5	24.0	16.5	22	○

Panel cut-out: **P1** PCB drilling pattern: **P21**

Note: This contact type is available for all E●● receptacle models.
See page 156 for table of available types.
Length «L» depends on the number of contacts, see table on page 156.
The 3S series is delivered with a conical nut.

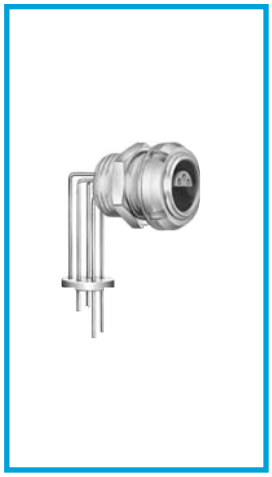

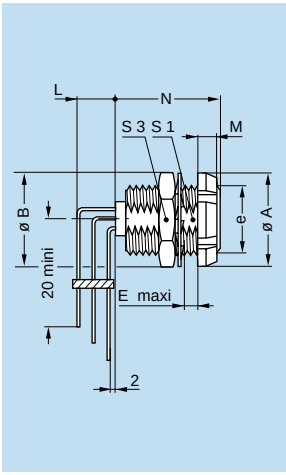

ECP Fixed receptacle with two nuts, long threaded shell, with elbow (90°) contacts for printed circuit
(back panel mounting)

Reference		Dimensions (mm)								Availability
Model	Series	A	B	e	E	M	N	S1	S3	
ECP	0S	12	12.5	M9x0.6	8.5	2.5	15.0	8.2	11	○
ECP	1S	16	16.0	M12x1.0	10.0	3.5	17.5	10.5	14	○
ECP	2S	20	19.5	M15x1.0	11.0	3.5	20.0	13.5	17	○
ECP	3S	24	25.2	M18x1.0	14.0	4.5	24.0	16.5	22	○

Panel cut-out: **P1** PCB drilling pattern: **P24**

Note: This contact type is available for all back panel mounting receptacle types.
See page 156 for available types.
Length «L» depends on the number of contacts, see PCB drilling pattern on page 156.
The 3S series is delivered with a conical nut.

● Standard, typically 0-6 weeks delivery for quantities of 250 or less.
○ Non-standard product, contact LEMO USA, typically 6-12 weeks delivery for quantities of 250 or less.
Non-standard product is defined as any product which contains one or more components which are not standard.

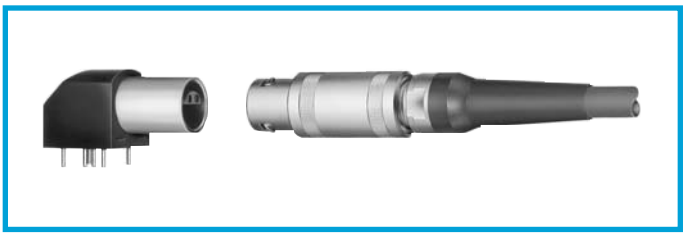

Elbow (90°) receptacles for printed circuit

These receptacle models are fixed onto the printed circuit either by soldering the corner pins or with four screws (M1.6) replacing the pins.
EXP receptacles are two nut fixing and are recommended in cases where a flexible printed circuit is used.

Technical Characteristics

Types

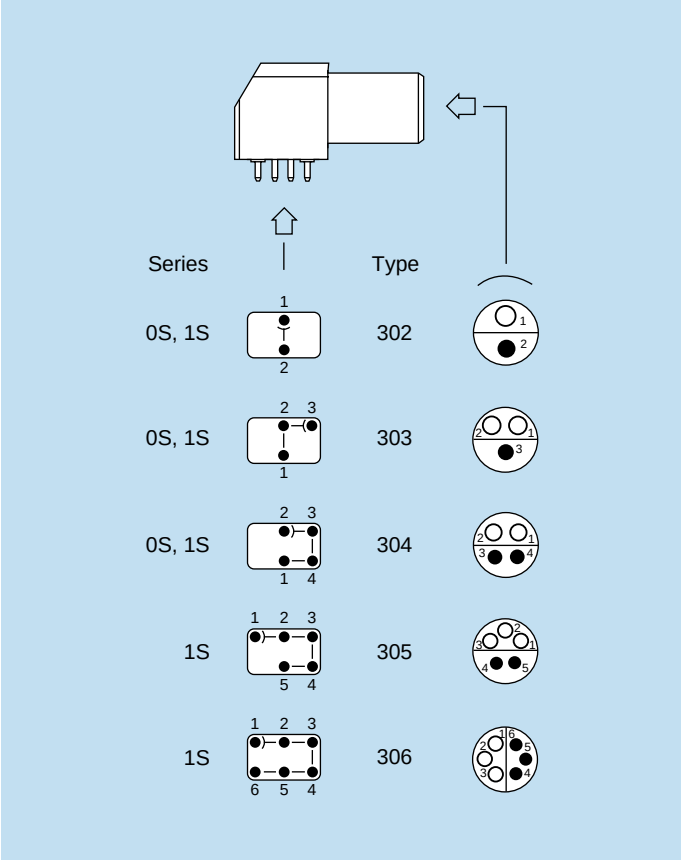

Materials and Treatment

Component	Material	Surface Treat. (µm)		
		Cu	Ni	Au
Housing	PPS 1)	–		
	Brass	0.5	3	–
Metallic parts	Brass	0.5	3	–
Grounding crown	Bronze	0.5	3	–
Insulator	PEEK	–		
Female contact	Bronze	0.5	3	1.5

Note: 1) Not used for all sizes.
The surface treatment standards are as follows:
Nickel FS QQ-N-290A;
Gold ISO 4523.

Electrical

Model	Series	Types	Test voltage (kV rms)1)	Rated current (A)
EPL	0S	302-303-304	1.20	4.5
EXP	0S			
EPL	1S			
EXP	1S			
EPL	1S	305-306	0.70	4.5
EXP	1S			

Note:
1) See calculation method, caution and suggested standard on page 11.

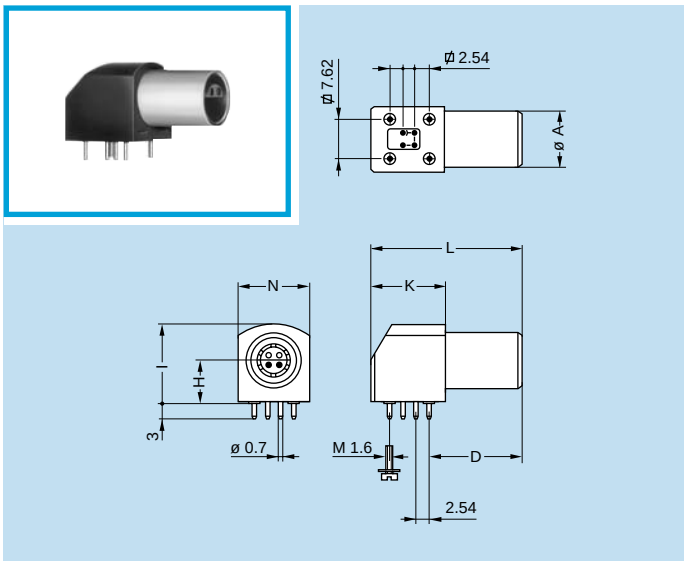

EPL Elbow (90°) receptacle for printed circuit
(solder or screw fixing)

Part Number	Dimensions (mm)							Availability
	A	D	H	I	K	L	N	
EPL.0S.302.HLN	9	14.5	6.9	12.7	13.2	25	11.6	○
EPL.0S.303.HLN								○
EPL.0S.304.HLN								●
EPL.1S.302.HLN	11	16.5	7.7	14.0	13.2	27	12.6	○
EPL.1S.303.HLN								○
EPL.1S.304.HLN								○
EPL.1S.305.HLN								○
EPL.1S.306.HLN								○

Note: To replace the 4 ground pins by 4 screws (M1.6) add an «S» to the end of the part number. (e.g.: EPL.1S.303.HLNS)

PCB drilling pattern: **P22**

Data Subject to Change

● Standard, typically 0-6 weeks delivery for quantities of 250 or less.
○ Non-standard product, contact LEMO USA, typically 6-12 weeks delivery for quantities of 250 or less.
Non-standard product is defined as any product which contains one or more components which are not standard.

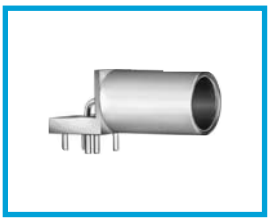

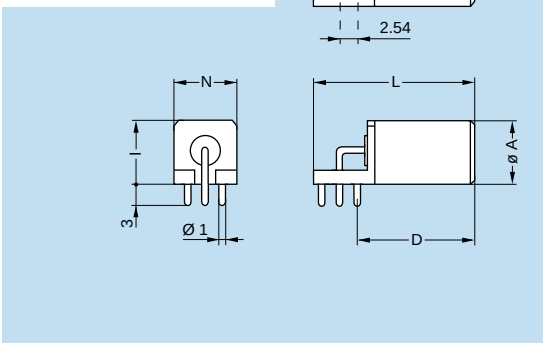

EPL Elbow (90°) receptacle for printed circuit

Part Number	Dimensions (mm)							Availability
	A	D	H	I	K	L	N	
EPL.0S.116.DTL	8.8	16	12	9	7.7	22.7	9	○

Note: Available only in single contact version.

PCB drilling pattern: **P23**

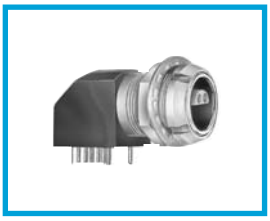

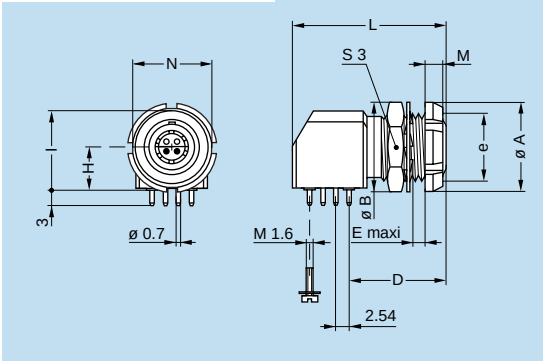

EXP Elbow (90°) receptacle for printed circuit with two nuts (solder or screw fixing)

Part Number	Dimensions (mm)												Avail-ability
	A	B	D	e	E	H	I	K	L	M	N	S3	
EXP.0S.302.HLN	12	12.5	14.5	M9x0.6	6.0	6.9	12.7	13.2	25	2.5	11.6	11	○
EXP.0S.303.HLN													○
EXP.0S.304.HLN													○
EXP.1S.302.HLN	14	15.0	16.5	M11x0.5	7.5	7.7	14.0	13.2	27	3.5	12.6	13	○
EXP.1S.303.HLN													○
EXP.1S.304.HLN													○
EXP.1S.305.HLN													○
EXP.1S.306.HLN													○

Note: To replace the four ground pins by four screws (M1.6) add an «S» to the end of the part number. (e.g.: EXP.1S.303.HLNS).

Panel cut-out: **P2** 0S series

Panel cut-out: **P10** 1S series

PCB drilling pattern: **P22**

● Standard, typically 0-6 weeks delivery for quantities of 250 or less.
○ Non-standard product, contact LEMO USA, typically 6-12 weeks delivery for quantities of 250 or less.
Non-standard product is defined as any product which contains one or more components which are not standard.

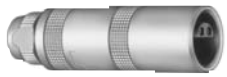

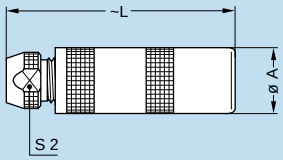

PCA Free receptacle, cable collet

Reference		Dimensions (mm)			Availability
Model	Series	A	L	S2	
PCA	00	6.5	25.0	4.5	●
PCA	0S	8.9	33.5	6.5	●
PCA	1S	11.9	40.5	8.5	●
PCA	2S	14.8	50.0	11.0	○
PCA	3S	17.8	59.0	14.0	○
PCA	4S	24.8	75.0	19.0	○
PCA	5S	34.7	99.0	29.0	○
PCA	6S	46.0	102.0	38.0	○

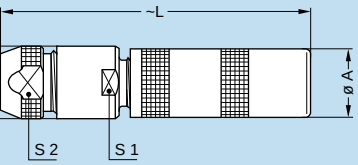

PCA Free receptacle with oversize cable collet

Reference		Dimensions (mm)					Availability
Model	Series	A	B	L	S1	S2	
PCA	00	6.5	8.0	33.0	7.0	6.5	○
PCA	0S	8.9	10.0	44.5	9.0	8.5	○
PCA	1S	11.9	13.0	55.0	12.0	11.0	○
PCA	2S	14.8	18.0	65.0	14.0	14.0	○
PCA	3S	17.8	21.0	83.0	19.0	19.0	○
PCA	4S	24.8	31.8	105.0	28.5	29.0	○

Note: The fitting of oversize collets onto this model allows it to be fitted to the cables that can be accommodated by the next housing size up.

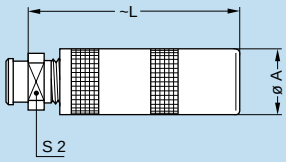

PCA Free receptacle, cable collet and nut for fitting a bend relief

Reference		Dimensions (mm)			Availability
Model	Series	A	L	S2	
PCA	00	6.5	25.0	6	●
PCA	0S	8.9	33.5	7	●
PCA	1S	11.9	40.5	9	●
PCA	2S	14.8	50.0	12	○
PCA	3S	17.8	59.0	14	○
PCA	4S	24.8	75.0	20	○

Note: The bend relief must be ordered separately (see page 137).

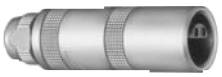

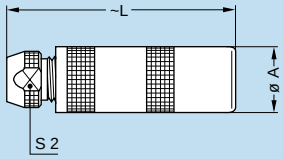

PCP Free receptacle, cable collet and inner anti-rotating device

Reference		Dimensions (mm)			Availability
Model	Series	A	L	S2	
PCP	0S	8.9	33.5	6.5	○
PCP	1S	11.9	40.5	8.5	○
PCP	2S	14.8	50.0	11.0	○
PCP	3S	17.8	59.0	14.0	○
PCP	4S	24.8	75.0	19.0	○

● Standard, typically 0-6 weeks delivery for quantities of 250 or less.
○ Non-standard product, contact LEMO USA, typically 6-12 weeks delivery for quantities of 250 or less.
Non-standard product is defined as any product which contains one or more components which are not standard.

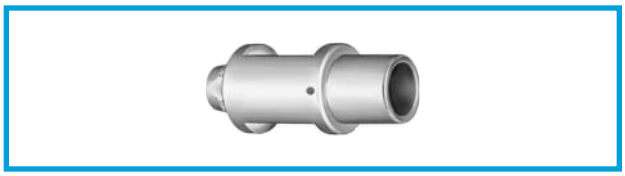

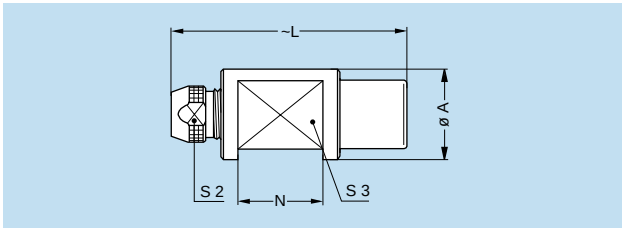

PZP Free receptacle for remote handling with cable collet and inner anti-rotating device

Reference		Dimensions (mm)					Availability
Model	Series	A	L	N	S2	S3	
PZP	1S	16	40.5	15	8.5	12	○
PZP	2S	24	50.0	21	11.0	18	○
PZP	3S	24	59.0	24	14.0	18	○

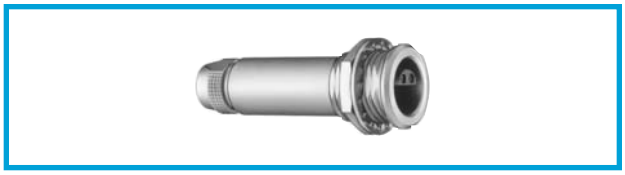

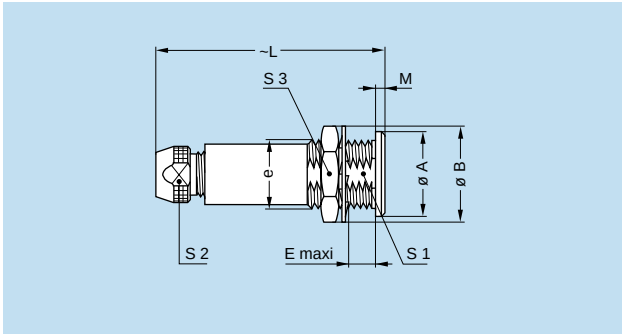

PSA Fixed receptacle, nut fixing, cable collet

Reference		Dimensions (mm)									Avail-ability
Model	Series	A	B	e	E	L	M	S1	S2	S3	
PSA	00	8	10.3	M7x0.5	5.5	25.0	1.0	6.3	4.5	9	●
PSA	0S	10	12.5	M9x0.6	7.0	33.5	1.2	8.2	6.5	11	○
PSA	1S	14	16.0	M12x1.0	7.5	40.5	1.5	10.5	8.5	14	○
PSA	2S	18	19.5	M15x1.0	8.5	50.0	1.8	13.5	11.0	17	○
PSA	3S	22	25.2	M18x1.0	11.5	59.0	2.0	16.5	14.0	22	○
PSA	4S	28	32.0	M25x1.0	12.0	75.0	2.5	23.5	19.0	30	○
PSA	5S	40	40.0	M35x1.0	15.5	99.0	3.0	33.5	29.0	–	○
PSA	6S	54	54.0	M48x1.5	16.0	102.0	3.5	45.5	38.0	–	○

Panel cut-out: **P1**

Note: The 5S series is delivered with a tapered washer and a round nut. The 6S series is delivered without a locking washer and with a round nut.

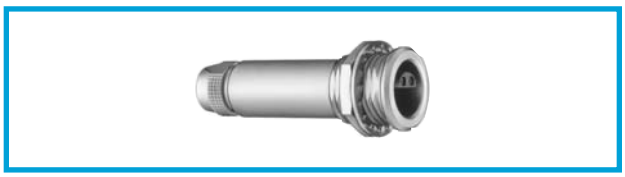

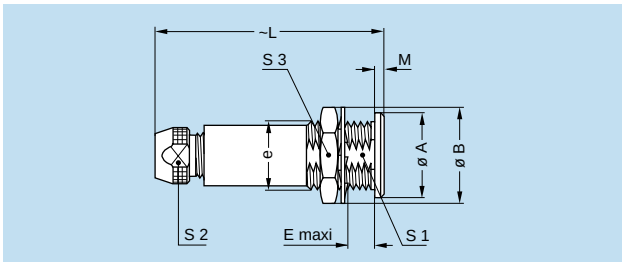

PSP Fixed receptacle, nut fixing, cable collet and inner anti-rotating device

Reference		Dimensions (mm)									Avail-ability
Model	Series	A	B	e	E	L	M	S1	S2	S3	
PSP	0S	10	12.5	M9x0.6	7.0	33.5	1.2	8.2	6.5	11	○
PSP	1S	14	16.0	M12x1.0	7.5	40.5	1.5	10.5	8.5	14	○
PSP	2S	18	19.5	M15x1.0	8.5	50.0	1.8	13.5	11.0	17	○
PSP	3S	22	25.2	M18x1.0	11.5	59.0	2.0	16.5	14.0	22	○
PSP	4S	28	32.0	M25x1.0	12.0	75.0	2.5	23.5	19.0	30	○

Panel cut-out: **P1**

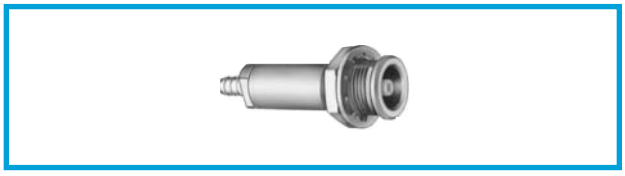

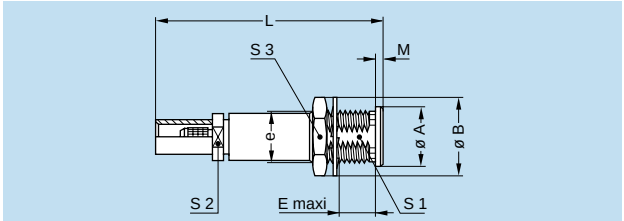

PSS Free receptacle, nut fixing for cable crimping

Reference		Dimensions (mm)									Avail-ability
Model	Series	A	B	e	E	L	M	S1	S2	S3	
PSS	00	8	10.3	M7x0.5	5.5	30	1	6.3	5.5	9	○

Panel cut-out: **P1**

● Standard, typically 0-6 weeks delivery for quantities of 250 or less.
○ Non-standard product, contact LEMO USA, typically 6-12 weeks delivery for quantities of 250 or less.
Non-standard product is defined as any product which contains one or more components which are not standard.

Data Subject to Change

Models with microswitch

Some receptacles are available fitted with a microswitch. The microswitch is independent from the electrical contacts of the receptacle. The introduction of the plug into the receptacle activates the microswitch (the drawings below are of corresponds to the receptacles without the plug).

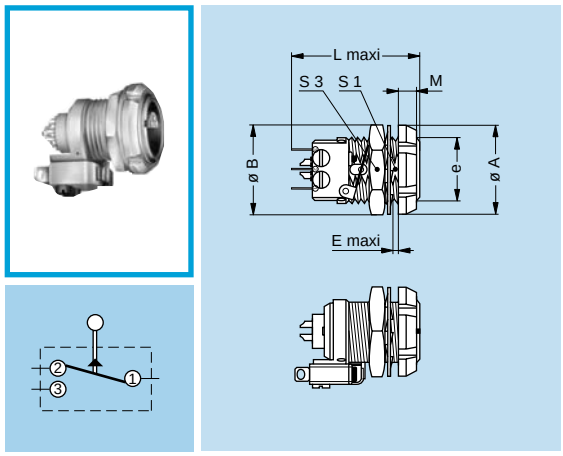

EMD Fixed receptacle with two nuts and microswitch
(back panel mounting)

Reference		Dimensions (mm)								Availability
Model	Series	A	B	e	E	L	M	S1	S3	
EMD	2S	20	19.5	M15x1.0	2.2	26.7	3.5	13.5	17	○

Panel cut-out: **P1**

Note: Only exists in 10-contact version (type 310).
For the microswitch: maximum operating voltage: 250Veff/Vdc rated current: 7A/0.25A.

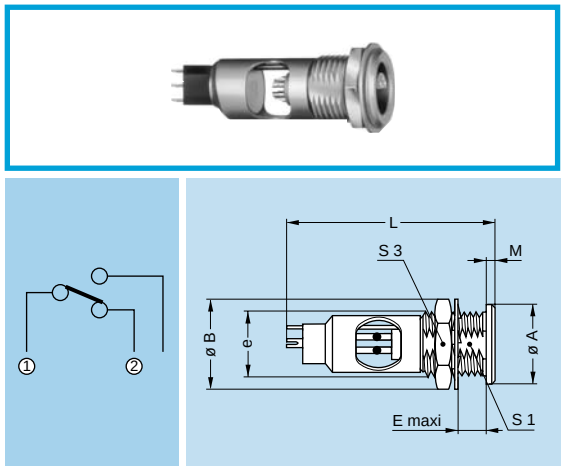

ERM Fixed receptacle, nut fixing with microswitch

Reference		Dimensions (mm)								Availability
Model	Series	A	B	e	E	L	M	S1	S3	
ERM	1S	14	16	M12x1.0	7.5	38	1.5	10.5	14	○

Panel cut-out: **P1**

Note: Only exists in 2 or 5-contact versions (type 302, 305).
For the microswitch: maximum operating voltage: 270Veff/Vdc rated current: 8.5A/0.5A.

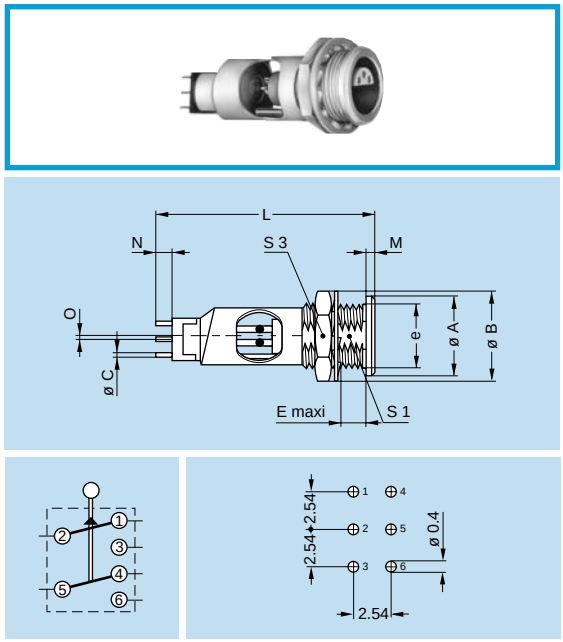

ERZ Fixed receptacle, nut fixing with double microswitch and printed circuit contacts

Reference		Dimensions (mm)											Avail-ability
Model	Series	A	B	C	e	E	L	M	N	O	S1	S3	
ERZ	1S	14	16	0.4	M12x1.0	7.5	39	1.5	2.7	0.9	10.5	14	○

Panel cut-out: **P1**

Note: Only exists in 3 or 6-contact versions (type 303, 306).
For the microswitch: maximum operating voltage: 28 Veff rated current: 0.1 A.

● Standard, typically 0-6 weeks delivery for quantities of 250 or less.
○ Non-standard product, contact LEMO USA, typically 6-12 weeks delivery for quantities of 250 or less.
Non-standard product is defined as any product which contains one or more components which are not standard.

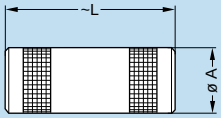

RMA Free coupler

Reference		Dim. (mm)		Availability
Model	Series	A	L	
RMA	00	6.4	22.0	○
RMA	0S	8.9	25.0	○
RMA	1S	11.9	28.5	○
RMA	2S	14.8	31.5	○
RMA	3S	17.8	38.5	○
RMA	4S	24.8	46.5	○
RMA	5S	34.7	60.5	○

Note: See page 101 for the available plug and contact configurations and in order to ensure correct contact alignment.

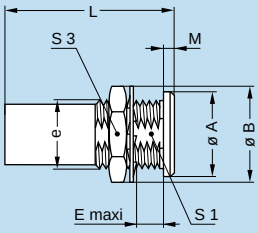

RAD Fixed coupler, nut fixing

Reference		Dimensions (mm)								Avail-ability
Model	Series	A	B	e	E	L	M	S1	S2	
RAD	00	8	10.3	M7x0.5	5.5	22.0	1.0	6.3	9	○
RAD	0S	10	12.5	M9x0.6	7.0	25.0	1.2	8.2	11	○
RAD	1S	14	16.0	M12x1.0	7.5	28.5	1.5	10.5	14	○
RAD	2S	18	19.5	M15x1.0	8.5	31.5	1.8	13.5	17	○
RAD	3S	22	25.2	M18x1.0	11.5	38.5	2.0	16.5	22	○
RAD	4S	28	32.0	M25x1.0	12.0	46.5	2.5	–	30	○
RAD	5S	40	40.0	M35x1.0	15.5	60.5	3.0	–	–	○

Panel cut-out: **P1** Panel cut-out: **P2** 4S and 5S series

Note: See page 97 for the available plug and contact configurations and in order to ensure correct contact alignment.

Note: The 5S series is delivered with a tapered washer and a round nut.

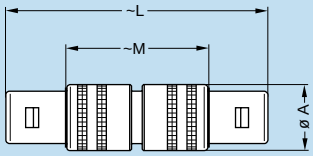

FEF Straight coupler with two plugs and front seal

Reference		Dimensions (mm)			Availability
Model	Series	A	L	M	
FEF	5S	39	130	80	○

● Standard, typically 0-6 weeks delivery for quantities of 250 or less.
○ Non-standard product, contact LEMO USA, typically 6-12 weeks delivery for quantities of 250 or less.
Non-standard product is defined as any product which contains one or more components which are not standard.

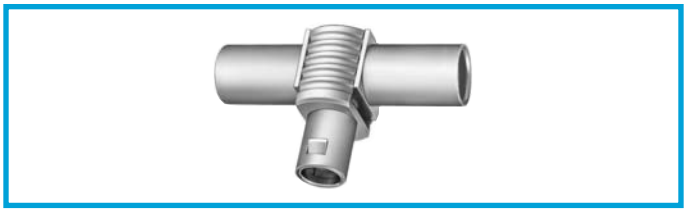

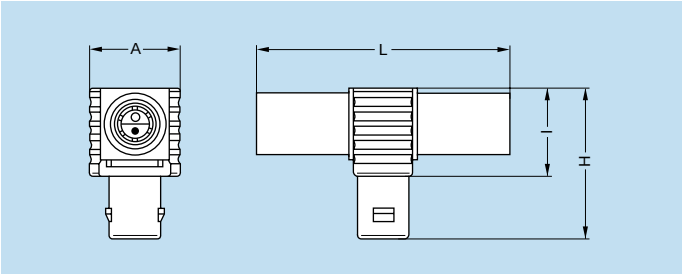

FTA T-plug with two in line receptacles

Reference		Dimensions (mm)				Availability
Model	Series	A	H	I	L	
FTA	00	9	17.5	9.5	30	○
FTA	0S	13	23.0	13.0	38	○
FTA	1S	16	26.5	16.5	45	○
FTA	3S	21	38.5	23.5	64	○

Note: Multicontact version available only with 2 contacts (type 302).

● Standard, typically 0-6 weeks delivery for quantities of 250 or less.
○ Non-standard product, contact LEMO USA, typically 6-12 weeks delivery for quantities of 250 or less.
Non-standard product is defined as any product which contains one or more components which are not standard.

Plastic Housing Models

FFA, FFP, FFL and ERN plug and receptacle models are also available with the outer shell and the collet nut made from various insulating materials. These connectors are particularly recommended for all applications requiring maximum electrical insulation when mated, such as medical applications. The design, including a latch sleeve and a metal grounding crown, guarantees EMC screening efficiency to meet most requirements.

Technical Characteristics

Mechanical and Climatic

Characteristics	Value				Standard
	PEEK	POM	PSU	PPSU	
Color	natural (beige)	black	white or grey	cream	–
Endurance	> 5000 cycles	> 5000 cycles	> 5000 cycles	> 5000 cycles	IEC 60512-5 test 9a
Humidity	up to 95% at 140° F				–
Temperature range	-58° F/+482° F	-58° F/+239° F	-58° F/+302° F	-58° F/+356° F	–
Sterilization resistance [1)]	> 200 cycles	none	~20 cycles	> 100 cycles	IEC 60601-1 § 44.7
Resistance to organic solvents	very good	very good	limited	good	–

Note:
[1)] Steam sterilization

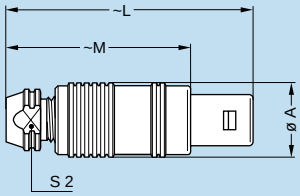

FFA **Straight plug, cable collet, PEEK or POM outer shell**

FFP **Straight plug, cable collet, PEEK or POM outer shell and inner anti-rotating device**

Reference		Dimensions (mm)				Availability
Model	Series	A	L	M	S2	
FFA	00	7.0	33.5	25.5	6.0	○
FFP	0S	9.5	34.5	24.5	8.0	○
FFP	1S	12.0	42.5	31.5	10.0	○
FFP	2S	15.0	52.0	40.0	12.0	○
FFP	3S	18.0	61.0	46.0	14.0	○

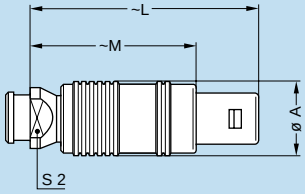

FFP **Straight plug, cable collet, PEEK or POM outer shell, inner anti-rotating device and nut for fitting a bend relief**

Reference		Dimensions (mm)				Availability
Model	Series	A	L	M	S2	
FFP	0S	9.5	33.5	23.5	7.0	○
FFP	1S	12.0	41.5	30.5	10.0	○
FFP	2S	15.0	51.0	39.0	12.0	○
FFP	3S	18.0	61.0	46.0	14.0	○

Note: The bend relief must be ordered separately (see page 137).

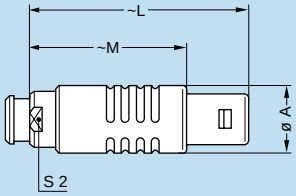

FFL **Straight plug, cable collet, with PSU and PPSU outer shell, inner anti-rotating device and nut for fitting a bend relief**

Reference		Dimensions (mm)				Availability
Model	Series	A	L	M	S2	
FFL	2S	16.5	51.5	39.5	13	○

Note: The bend relief must be ordered separately (see page 137).
This model is fitted with a «D or M» type collet system (see page 158).
It is also adapted for crimp contacts.

● Standard, typically 0-6 weeks delivery for quantities of 250 or less.
○ Non-standard product, contact LEMO USA, typically 6-12 weeks delivery for quantities of 250 or less.
Non-standard product is defined as any product which contains one or more components which are not standard.

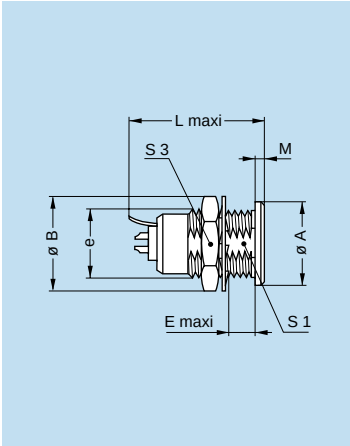

ERN Fixed receptacle, nut fixing, with grounding tab, PEEK or POM outer shell

Reference		Dimensions (mm)									Avail-ability
Model	Series	A	B	e	E	L	L[1)]	M	S1	S3	
ERN	00	9	10.3	M7x0.5	5.5	–	14.5	1.0	6.3	9	○
ERN	0S	11	12.5	M9x0.6	7.0	19.3	19.3	1.2	8.2	11	○
ERN	1S	14	16.0	M12x1.0	7.5	22.4	22.4	1.5	10.5	14	○
ERN	2S	18	19.5	M15x1.0	8.5	26.3	26.3	2.0	13.5	17	○
ERN	3S	22	25.2	M18x1.0	11.5	29.8	29.8	2.0	16.5	22	○

Panel cut-out: **P1**

Note: 1) Single contact model.

Watertight or vacuum-tight models

HGP, HGW, EWB, HCP, SWH receptacle or coupler models allow the device on which they are fitted to reach a protection index of IP68 as per IEC 60529. They are fully compatible with plugs of the same series and are widely used for portable radios, military, laboratory equipment, aviation, etc. These models are identified by a letter «P» at the end of the reference.

Most of these models are also available in a vacuum-tight version. Such models are identified by an additional letter «V» at the end of the part number (certificate on request).

Epoxy resin is used to seal these models.

Part number example:
Watertight receptacle – HGP.1S.304.CLLP
Vacuum-tight receptacle – HGP.1S.304.CLLPV

Technical Characteristics

Mechanical and Climatic

Characteristics		Value	Standard
Endurance		> 5000 cycles	IEC 60512-5 test 9a
Humidity		up to 95% at 140° F	
Temperature range		- 4° F/+176° F	
Salt spray corrosion test		> 144h	IEC 60512-6 test 11f
Protection index (mated)		IP 68	IEC 60529
Climatic category		20/80/21	IEC 60068-1
Leakage rate (He)[1)]		< 10^{-7} mbar.l.s^{-1}	IEC 60512-7 test 14b
Maximum operating pressure[2)]	0S	60 bars	IEC 60512-7 test 14d
	1S	60 bars	
	2S	40 bars	
	3S	30 bars	
	4S	15 bars	
	5S	5 bars	
	6S	5 bars	

Note:
1) Only for vacuum-tight models.
2) This value corresponds to the maximum allowed pressure difference for the assembled receptacle.

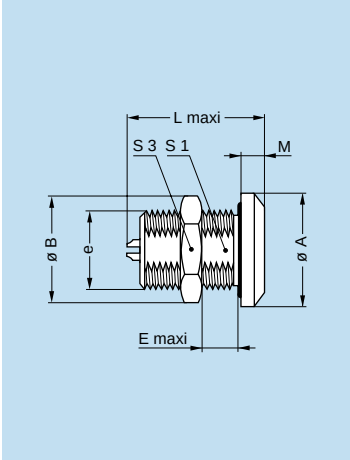

HGP Fixed receptacle, nut fixing, watertight or vacuum-tight

Reference		Dimensions (mm)									Avail-ability
Model	Series	A	B	e	E	L	L[1)]	M	S1	S3	
HGP	0S	18	16.0	M12x1.0	11.5	20.5	21.5	4.0	10.5	14	○
HGP	1S	20	19.5	M14x1.0	15.5	25.0	22.0	4.0	12.5	17	○
HGP	2S	20	21.8	M16x1.0	17.0	29.5	28.0	4.0	14.5	19	○
HGP	3S	28	27.0	M20x1.0	18.0	33.0	34.0	6.0	18.5	24	○
HGP	4S	34	34.0	M25x1.0	22.5	39.0	43.0	6.5	23.5	30	○
HGP	5S	45	40.0	M35x1.0	28.0	50.5	78.5	7.5	33.5	–	○
HGP	6S	58	54.0	M48x1.5	22.0	50.0	–	6.0	45.5	–	○

Panel cut-out: **P3**

Note: 1) Single contact model

Note: The 5S and 6S series are delivered with a round nut.

● Standard, typically 0-6 weeks delivery for quantities of 250 or less.
○ Non-standard product, contact LEMO USA, typically 6-12 weeks delivery for quantities of 250 or less.
Non-standard product is defined as any product which contains one or more components which are not standard.

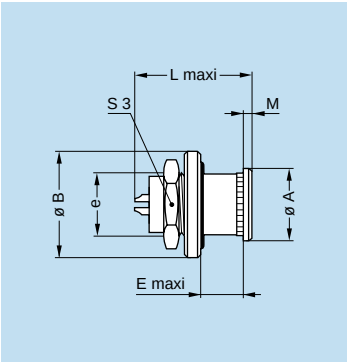

HGW Fixed receptacle, nut fixing, with back washer, watertight or vacuum-tight

Reference		Dimensions (mm)							Avail-ability
Model	Series	A	B	e	E	L	M	S3	
HGW	0S	10	15	M9x0.6	2	17.5	1.2	11	○
HGW	1S	14	18	M12x1.0	4	20.2	1.5	14	○

Panel cut-out: **P11**

Note: Vacuum-tight version is only available in the 0S series.

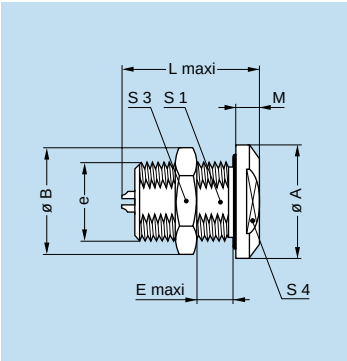

EWB Fixed receptacle, nut fixing, with two flats on the flange, watertight or vacuum-tight

Reference		Dimensions (mm)										Avail-ability
Model	Series	A	B	e	E	L	L[1)]	M	S1	S3	S4	
EWB	0S	18	16.0	M12x1.0	11.0	20.5	–	4.0	10.5	14	14	○
EWB	1S	20	19.5	M14x1.0	15.5	25.5	25.5	4.0	12.5	17	16	○
EWB	2S	20	21.8	M16x1.0	17.0	28.0	26.5	4.0	14.5	19	16	○
EWB	4S	34	34.0	M25x1.0	22.5	43.0	–	6.5	23.5	30	27	○

Panel cut-out: **P3**

Note: [1)] Single contact model

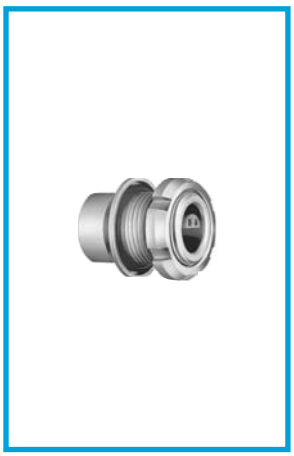

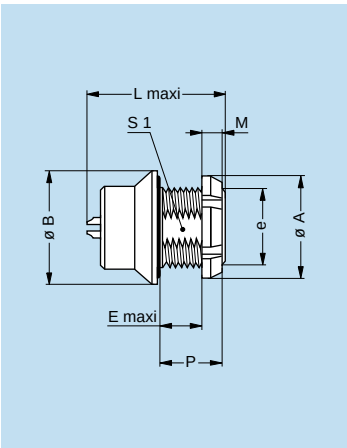

HCP Fixed receptacle, nut fixing, watertight or vacuum-tight (back panel mounting)

Reference		Dimensions (mm)								Avail-ability
Model	Series	A	B	e	E	L	M	P	S1	
HCP	1S	18	20	M14x1.0	8.6	25.5	3.5	12.0	–	○
HCP	2S	20	20	M16x1.0	12.5	29.0	3.5	16.5	14.5	○
HCP	4S	27	34	M25x1.0	15.5	41.0	4.5	20.0	23.5	○

Panel cut-out: **P3**

Note: The 4S series is delivered with a conical nut.

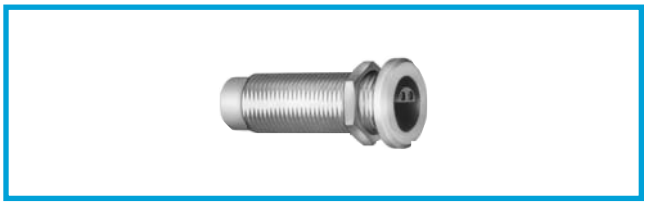

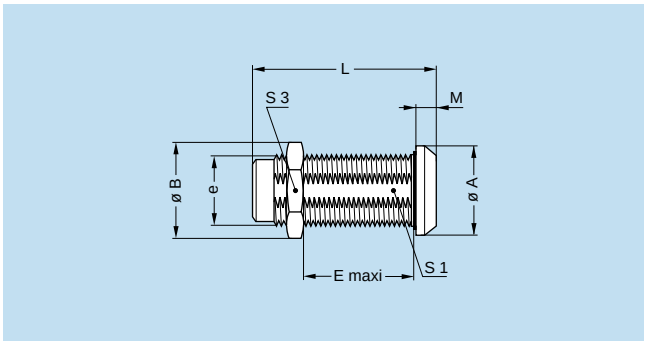

SWH Fixed coupler, nut fixing, watertight or vacuum-tight

Reference		Dimensions (mm)								Avail-ability
Model	Series	A	B	e	E	L	M	S1	S3	
SWH	0S	14	13.8	M10x0.75	17	34	2.0	9.0	12	○
SWH	1S	17	16.0	M12x1.00	28	39	2.5	10.5	14	○
SWH	2S	20	21.8	M16x1.00	25	44	4.0	15.0	19	○
SWH	3S	25	27.0	M20x1.00	30	53	4.0	18.5	24	○
SWH	4S	34	32.0	M25x1.00	50	65	4.0	23.5	30	○
SWH	5S	45	40.0	M35x1.00	58	80	5.0	33.5	–	○
SWH	6S	58	54.0	M48x1.50	55	81	6.0	45.5	–	○

Panel cut-out: **P4**

Note: See page 96 for the available plug and contact configurations and in order to ensure correct contact alignment.
The 5S and 6S series are delivered with a round nut.

● Standard, typically 0-6 weeks delivery for quantities of 250 or less.
○ Non-standard product, contact LEMO USA, typically 6-12 weeks delivery for quantities of 250 or less.
Non-standard product is defined as any product which contains one or more components which are not standard.

Type

Single contact

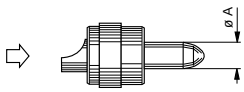

Male solder contacts

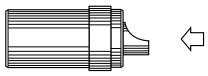

Female solder contacts

	Reference	ø A (mm)	Contact type availability: Solder	Contact type availability: Crimp	Test voltage (kV rms)[1]	Test voltage (kV dc)[1]	Rated current (A)[1]
00	113	1.3	●[2]	○	0.8	1.2	8
0S	116	1.6	○[2]	–	1.5	2.1	12
1S	120	2.0	○[2]	–	1.8	2.7	18
	130	3.0	○	–	1.5	2.1	25
2S	130	3.0	○	–	2.1	3.0	30
	140	4.0	○	–	1.8	2.4	40
3S	140	4.0	○	–	2.4	3.3	43
	160	6.0	○	–	1.8	2.4	65
4S	140	4.0	○	–	3.0	4.2	46
	160	6.0	○	–	2.7	3.9	70
5S	112	12.0	○	–	1.5	2.1	230

Note: [1] See calculation method, caution and suggested standard on page 11.
[2] Also available with inversed contacts: plug = female, receptacle = male.

Data Subject to Change

● Standard, typically 0-6 weeks delivery for quantities of 250 or less.
○ Non-standard product, contact LEMO USA, typically 6-12 weeks delivery for quantities of 250 or less.
Non-standard product is defined as any product which contains one or more components which are not standard.

Single contact high voltage

		Reference	Contact ø A (mm)	Solder contact availability	HV contact gender[2]	AWG max. Solid	AWG max. Stranded	Cable dielectric ø max. (mm)	Standard insulator material[3]	Test voltage (kV dc)[4]	Rated current (A)[4]
0S	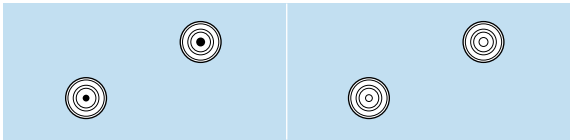	403	0.9	○	A L	20	22	2.9	T	6	4
		405	0.7	○	A	24	26	2.9	L	12	4
1S	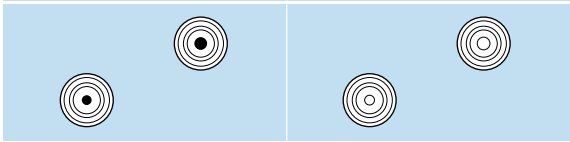	405	1.3	○	A L	18	20	4.0	T	10.5	8
		408	0.9	○	A	20	22	4.0	L	18	6
2S		408	2.0	○	A L	14	16	5.1	T	12	10
3S	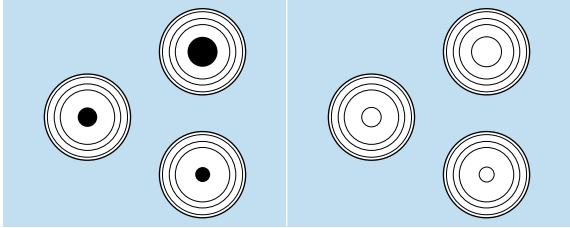	405	4.0	○	A	10	12	7.5	T	10.5	15
		410	2.0	○	A L	12	14	7.3	T	15	10
		415	1.3	○	A L	16	18	7.3	T	21	8
4S	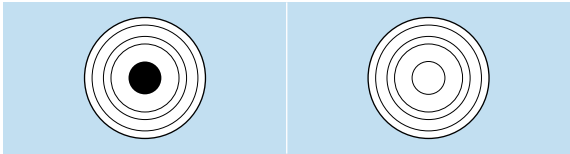	410	2.5	○	A	6	8	9.5	T	15	12

Note:
2) A = male for plug; female for socket, L = female for plug; male for socket
3) L = Peek, T = PTFE
4) See calculation method, caution and suggested standard on page 11

● Standard, typically 0-6 weeks delivery for quantities of 250 or less.
○ Non-standard product, contact LEMO USA, typically 6-12 weeks delivery for quantities of 250 or less.
Non-standard product is defined as any product which contains one or more components which are not standard.

Coaxial

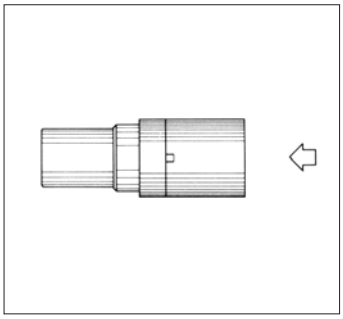

	Reference	Impedance	Male or female contact available	Cable Group	VSWR (GHz)	Test Voltage AC (V)	Test Voltage DC (V)	Rated current (Amps)	Availability
00	250	50	M/F	1-3-5-6	1.09 +.11f	2100	3000	4	○
0S	250	50	M/F	1-2-3-4	1.02 +.25f	3000	4200	6	○
1S	250	50	M/F	1-2-3 4-6	1.01 +.08f	3000	4200	12	○
	275	75	M/F	5-6-7	1.02 +.08f	2400	3300	10	○
2S	250	50	M/F	6-7	1.02 +.95f	3000	4200	15	○
	275	75	M/F	6-7	1.02 +.03f	1500	2100	12	○
3S	250	50	M/F	8	1.06 +.5f	3000	4200	26	○
	275	75	M/F	8	1.04 +.05f	2700	3900	15	○
4S	250	50		8-9	1.01 +1.9f	2100	3000	36	○
	275	75	M/F	8-9-0	1.01 .12f	1800	2700	26	○
5S	250	50		9	1.02 +2.3f	3000	4200	45	○
	275	75		9-0	1.01 +.7f	3000	4200	36	○

1) The cable group corresponding to the chosen cable must be written in the Variant position of the part number. See page 83.

● Standard, typically 0-6 weeks delivery for quantities of 250 or less.
○ Non-standard product, contact LEMO USA, typically 6-12 weeks delivery for quantities of 250 or less.
Non-standard product is defined as any product which contains one or more components which are not standard.

Triaxial

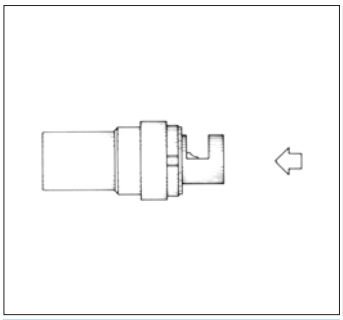

	Reference	Impedance	Male or female contact available	Cable Group	VSWR (GHz)	Rated current (Amps)	Availability
00	650	50	M/F	-	1.1 +.11f	3	○
0S	650	50	M/F	1-2	1.03 +.34f	6	○
1S	650	50	M/F	1-2	1.01 +.17f	6	○
2S	650	50	M/F	2-3-4	1.01 +.3f	12	○
	675	75	M/F	4-6	1.02 +.07f	6	○
3S	650	50	M/F	3-4-5	1.01 +.27f	15	○
	675	75	M/F	4-5	1.02 +.05f	6	○
4S	650	50	M/F	4-5	1.01 +.38f	26	○
	675	75	M/F	4-5-7	1.01 +.14f	15	○

Recommended coaxial cables

Type	Group 1) 1	2	3	4	5	6	7	8	0
RG.11A/U								■	
RG.12A/U									■
RG.58C/U						■			
RG.59B/U							■		
RG.115A/U								■	
RG.122/U				■					
RG.142B/U						■			
RG.144/U								■	
RG.165/U								■	
RG.174 A/U			■						

Type	Group 1) 1	2	3	4	5	6	7	8	9
RG.178B/U	■								
RG.179B/U					■				
RG.187A/U					■				
RG.188 A/U		■							
RG.196A/U	■								
RG.213/U								■	
RG.214/U									■
RG.216/U									■
RG.223/U								■	
RG.225/U									■

Type	Group 1) 2	3	4	5	6	7
RG.302/U						■
RG.316/U		■				
RG.400/U						■
HF-2114 Datwyler		■				
HF-5408/1 Datwyler						■
2YCCY .4/2.4 Siemans					■	
CCE.99.281.505 LEMO		■				
CCH.99.281.505 LEMO		■				

Recommended triaxial cables

Type	Group 1) 1	2	3	4	5
CTA.99.290.803 LEMO	■				
CTD.99.391.505 LEMO		■			
9222 Belden			■		
21.738 Amphenol			■		
118202 Filotex				■	
21.204 Amphenol				■	
HF-2318 Datwyler					■
8215 Belden				■	
8232 Belden				■	

Type	Group 1) 4	5	6	7
HF-2426 Datwyler	■			
CTC.99.371.603 LEMO			■	
12765700 F&G	■			
9627 Belden		■		
10069-C-G20 BIW		■		
12766400 F&G				■
12766601 F&G				■
8233 Belden				■
9888 Bleden				■

● Standard, typically 0-6 weeks delivery for quantities of 250 or less.
○ Non-standard product, contact LEMO USA, typically 6-12 weeks delivery for quantities of 250 or less.
Non-standard product is defined as any product which contains one or more components which are not standard.

Data Subject to Change

Multicontact

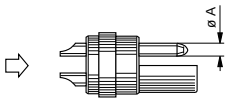

Male solder contacts

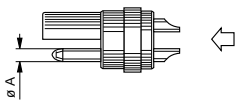

Female solder contacts

	Reference	Number of contacts	ø A (mm)	Contact type availability: Solder	Crimp	Printed circuit (straight)	Printed circuit (elbow)	Test voltage (kV rms)[1) 2)]	Test voltage (kV dc)[1) 2)]	Rated current (A)[1)]
0S	302	2	0.9	●	○	○	○	1.5	2.1	10[3)]
	303	3	0.7	●	○	○	○	1.0	1.5	7[3)]
	304	4	0.7	●	○	○	○	1.0	1.5	7[3)]
1S	302	2	1.3	●	○	○	○	1.2	1.8	15[3)]
	303	3	0.9	●	○	○	○	1.2	1.8	10[3)]
	304	4	0.9	●	○	○	○	1.2	1.8	10[3)]
	305	2 3	0.9 0.7	○	○	○	○	1.5 1.5	2.1 2.1	10[3)] 7[3)]
	306	6	0.7	●	○	○	○	1.5	2.1	7[3)]
2S	302	2	1.6	○	○	○	○	1.7	2.4	20[4)]
	303	3	1.3	○	○	○	○	1.5	2.1	15[4)]
	304	4	1.3	○	○	○	○	1.7	2.4	15[4)]
	305	5	1.3	○	○	○	○	1.5	2.1	13[4)]
	306	6	1.3	●	○[5)]	○	○	1.5	2.1	12
	307	3 4	1.3 0.9	○	○	○	●	0.8 0.8	1.2 1.2	12[3)] 9[3)]
	308	8	0.9	○	○	○	●	0.8	1.2	9[3)]
	310	10	0.9	●	○	○	●	0.8	1.2	7[3)]
3S	302	2	2.0	○	○	○	–	3.0	4.2	23
	303	3	2.0	○	○	○	–	1.5	2.1	20
	304	4	2.0	○	○	○	–	1.5	2.1	18
	305	2 3	2.0 1.3	○	○	○	–	1.5 1.5	2.1 2.1	18 14
	306	6	1.3	○	○	○	–	2.1	3.0	14
	307	7	1.3	○	○	○	–	1.0	1.5	12

Note:
1) See calculation method, caution and suggested standard on page 11

● Standard, typically 0-6 weeks delivery for quantities of 250 or less.
○ Non-standard product, contact LEMO USA, typically 6-12 weeks delivery for quantities of 250 or less.
Non-standard product is defined as any product which contains one or more components which are not standard.

Multicontact

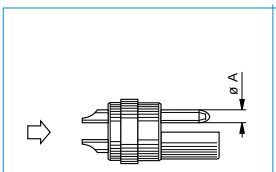

Male solder contacts

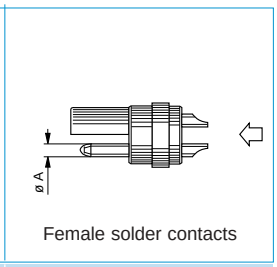

Female solder contacts

	Reference	Number of contacts	ø A (mm)	Contact type availability: Solder	Crimp	Printed circuit (straight)	Printed circuit (elbow)	Test voltage (kV rms)[1) 2)]	Test voltage (kV dc)[1) 2)]	Rated current (A)[1)]
3S	308	8	1.3	○	○	○	○	1.0	1.5	10
	310	10	1.3	○	○	○	○	1.0	1.5	9
	312	12	0.9	○	○	○	○	1.5	2.1	8
	313	13	0.9	○	○	○	○	1.5	2.1	8
	314	14	0.9	○	○	○	○	1.5	2.1	7
	316	16	0.9	○	○	○	○	1.0	1.5	7
	318	18	0.9	○	○	○	○	1.0	1.5	6
4S	302	2	4.0	○	–	○	–	2.1	3.0	35
	303	3	3.0	○	–	○	–	2.1	3.0	25
	304	4	3.0	○	–	○	–	2.1	3.0	22
	305	2 3	3.0 2.0	○	–	○	–	2.1 2.1	3.0 3.0	22 16
	306	6	2.0	○	○	○	–	2.1	3.0	16
	307	3 4	2.0 1.3	○	–	○	–	2.1 2.1	3.0 3.0	16 13
	308	8	1.3	○	–	○	–	2.7	3.9	13
	309	9	1.3	○	–	○	–	2.1	3.0	12
	310	10	1.3	○	–	○	–	2.1	3.0	11
	312	12	1.3	○	–	○	–	2.1	3.0	9
	313	13	1.3	○	–	○	–	2.1	3.0	9

Note: 1) See calculation method, caution and suggested standard on page 11.
2) Lowest measured value; contact to contact or contact to shell.

● Standard, typically 0-6 weeks delivery for quantities of 250 or less.
○ Non-standard product, contact LEMO USA, typically 6-12 weeks delivery for quantities of 250 or less.
Non-standard product is defined as any product which contains one or more components which are not standard.

Multicontact

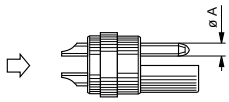

Male solder contacts

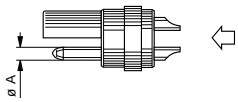

Female solder contacts

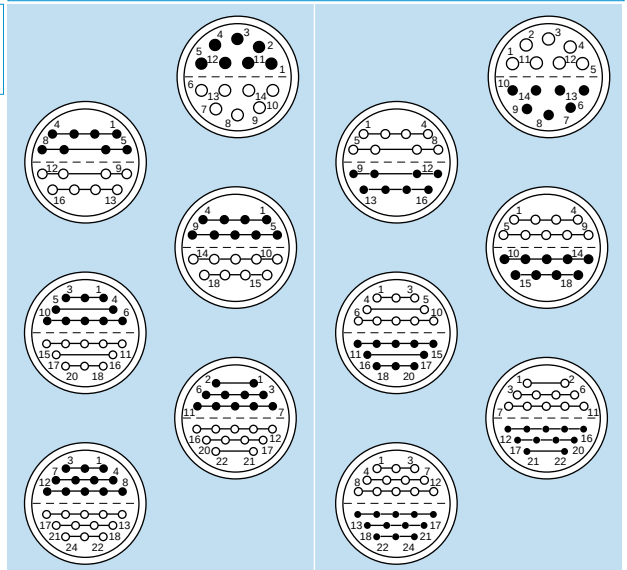

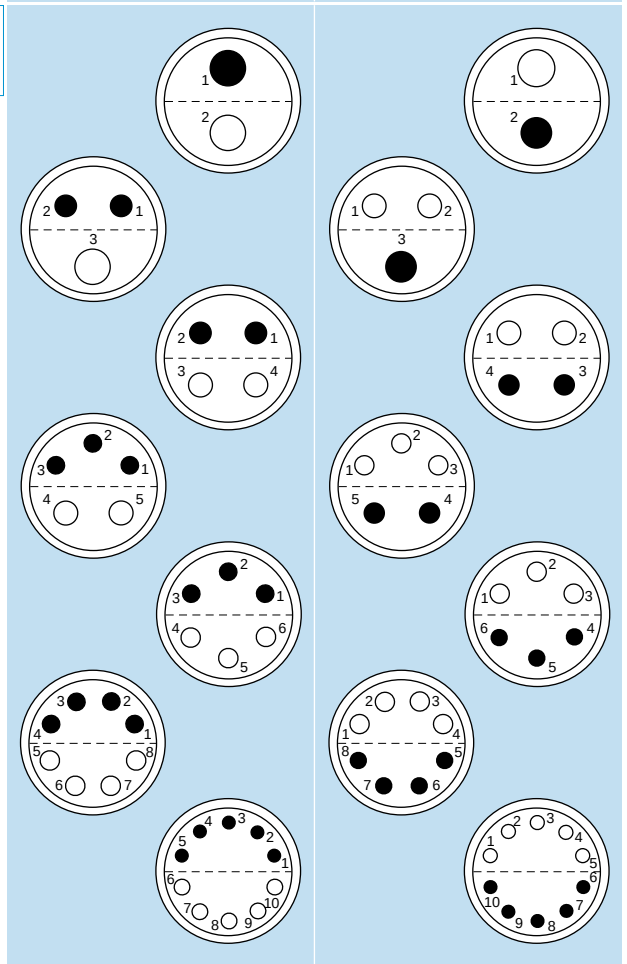

	Reference	Number of contacts	ø A (mm)	Contact Type Availability: Solder	Contact Type Availability: Printed circuit (straight)	Contact Type Availability: Printed circuit (elbow)	Test voltage (kV rms)[1) 2)]	Test voltage (kV dc)[1) 2)]	Rated current (A)[1)]
4S	314	14	1.3	○	○	–	2.1	3.0	9
	316	16	0.9	○	○	–	2.1	3.0	7
	318	18	0.9	○	○	–	2.1	3.0	7
	320	20	0.9	○	○	–	2.1	3.0	7
	322	22	0.9	○	○	–	2.1	3.0	7
	324	24	0.9	○	○	–	2.1	3.0	7
5S	302	2	6.0	○	–	–	3.7	5.2	50
	303	1 2	6.0 4.0	○	–	–	3.7 3.7	5.2 5.2	50 35
	304	4	4.0	○	–	–	3.7	5.2	35
	305	2 3	4.0 3.0	○	–	–	3.0 3.0	4.2 4.2	35 25
	306	6	3.0	○	–	–	3.0	4.2	25
	308	8	3.0	○	–	–	2.1	3.0	22
	310	10	2.0	○	–	–	2.1	3.0	18

Note: 1) See calculation method, caution and suggested standard on page 11.
2) Lowest measured value; contact to contact or contact to shell.

● Standard, typically 0-6 weeks delivery for quantities of 250 or less.
○ Non-standard product, contact LEMO USA, typically 6-12 weeks delivery for quantities of 250 or less.
Non-standard product is defined as any product which contains one or more components which are not standard.

Multicontact

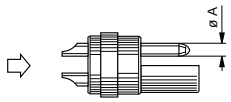

Male solder contacts

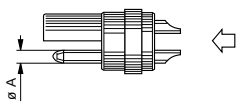

Female solder contacts

5S

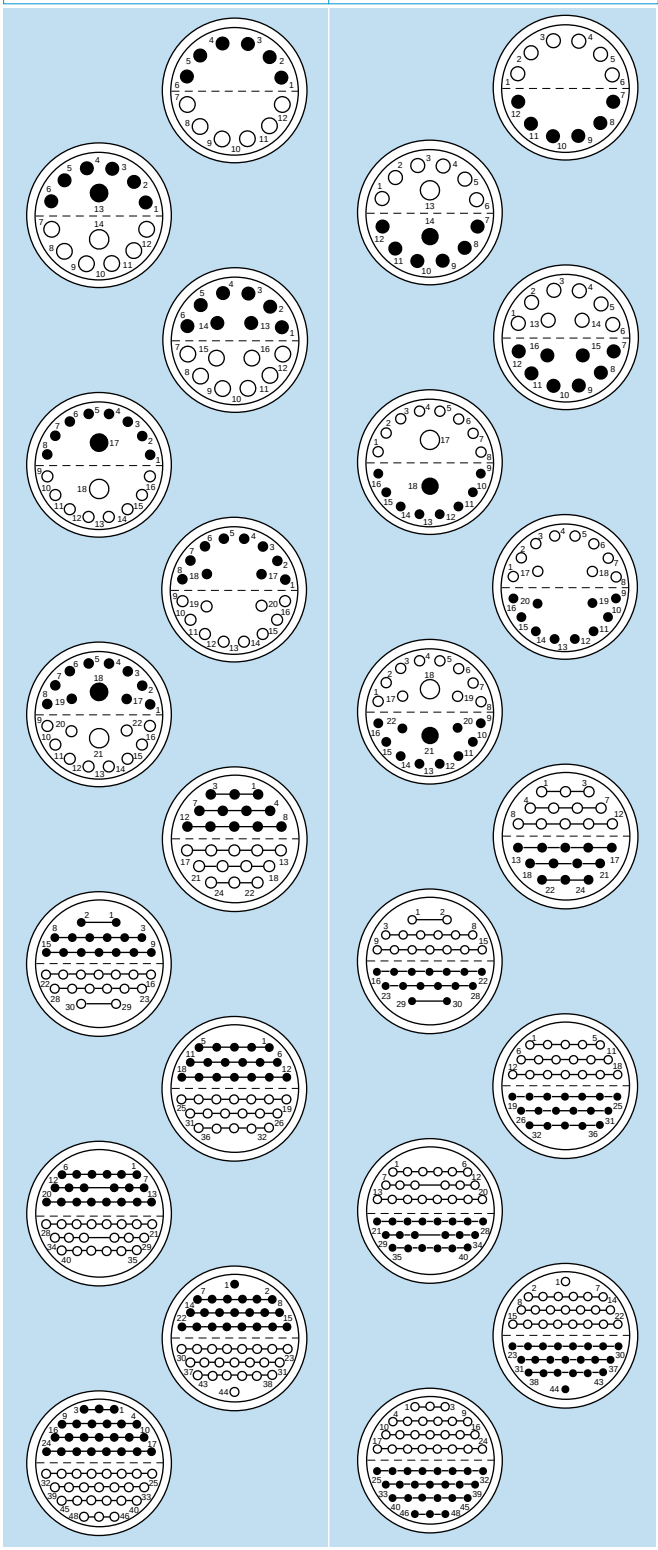

Reference	Number of contacts	ø A (mm)	Contact type availability: Solder	Contact type availability: Printed circuit (straight)	Contact type availability: Printed circuit (elbow)	Test voltage (kV rms)[1) 2)]	Test voltage (kV dc)[1) 2)]	Rated current (A)[1)]
312	12	2.0	○	–	–	2.1	3.0	18
314	2 12	3.0 2.0	○	–	–	1.8 1.8	2.4 2.4	20 15
316	16	2.0	○	–	–	1.8	2.4	15
318	2 16	3.0 1.6	○	–	–	1.8 1.8	2.4 2.4	18 11
320	20	1.6	○	–	–	1.8	2.4	11
322	2 20	3.0 1.6	○	–	–	1.8 1.8	2.4 2.4	16 9
324	24	1.6	○	–	–	2.7	3.9	9
330	30	1.3	○	–	–	1.8	2.4	8
336	36	1.3	○	–	–	1.8	2.4	7
340	40	1.3	○	–	–	1.2	1.8	7
344	44	1.3	○	–	–	1.2	1.8	6
348	48	1.3	○	–	–	1.2	1.8	6

Note: 1) See calculation method, caution and suggested standard on page 11.
2) Lowest measured value; contact to contact or contact to shell.

● Standard, typically 0-6 weeks delivery for quantities of 250 or less.
○ Non-standard product, contact LEMO USA, typically 6-12 weeks delivery for quantities of 250 or less.
Non-standard product is defined as any product which contains one or more components which are not standard.

Data Subject to Change

Multicontact

6S

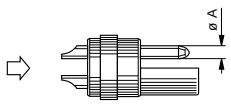

Male solder contacts

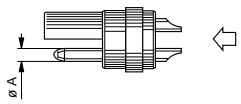

Female solder contacts

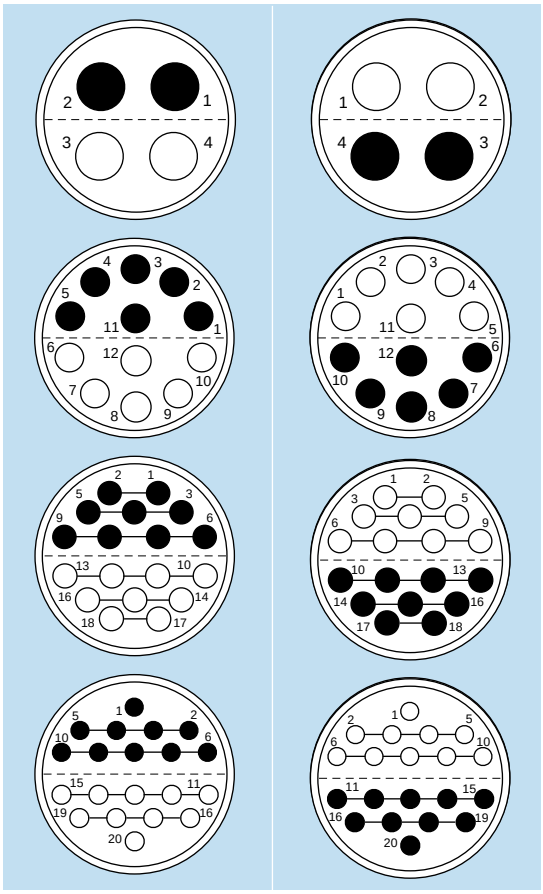

Reference	Number of contacts	ø A (mm)	Solder contacts	Test voltage (kV rms)[1) 2)]	Test voltage (kV dc)[1) 2)]	Rated current (A)[1)]
304	4	8.0	○	3.0	4.2	60
312	12	4.0	○	2.1	3.0	22
318	18	4.0	○	1.2	1.8	16
320	20	3.0	○	1.5	2.1	14

Note: 1) See calculation method, caution and suggested standard on page 11.
2) Lowest measured value; contact to contact or contact to shell.

● Standard, typically 0-6 weeks delivery for quantities of 250 or less.
○ Non-standard product, contact LEMO USA, typically 6-12 weeks delivery for quantities of 250 or less.
Non-standard product is defined as any product which contains one or more components which are not standard.

Multicontact

6S

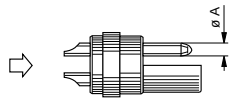

Male solder contacts

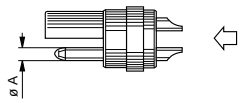

Female solder contacts

Reference	Number of contacts	ø A (mm)	Solder contacts	Test voltage (kV rms)[1) 2)]	Test voltage (kV dc)[1) 2)]	Rated current (A)[1)]
324	24	3.0	○	1.2	1.8	12
330	30	2.0	○	2.1	3.0	10
336	36	2.0	○	1.5	2.1	8
340	40	2.0	○	1.5	2.1	8

Note: 1) See calculation method, caution and suggested standard on page 11.
2) Lowest measured value; contact to contact or contact to shell.

● Standard, typically 0-6 weeks delivery for quantities of 250 or less.
○ Non-standard product, contact LEMO USA, typically 6-12 weeks delivery for quantities of 250 or less.
Non-standard product is defined as any product which contains one or more components which are not standard.

Multicontact

6S

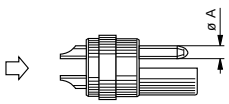

Male solder contacts

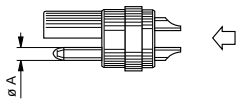

Female solder contacts

Reference	Number of contacts	ø A (mm)	Solder contact Availability	Test voltage (kV rms)[1) 2)]	Test voltage (kV dc)[1) 2)]	Rated current (A)[1)]
348	48	2.0	○	1.5	2.1	7
360	60	1.6	○	1.5	2.1	5
364	64	1.3	○	1.2	1.8	4
372	72	1.3	○	1.2	1.8	4
106	106	0.9	○	0.8	1.2	2

Note: 1) See calculation method, caution and suggested standard on page 11.
2) Lowest measured value; contact to contact or contact to shell.

Data Subject to Change

● Standard, typically 0-6 weeks delivery for quantities of 250 or less.
○ Non-standard product, contact LEMO USA, typically 6-12 weeks delivery for quantities of 250 or less.
Non-standard product is defined as any product which contains one or more components which are not standard.

Mixed Contacts (High Voltage + Low Voltage)

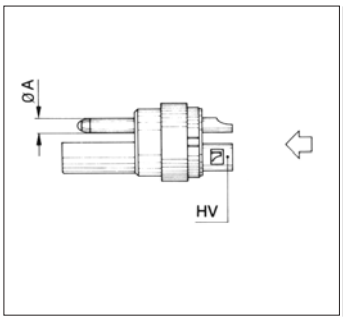

	Reference	Number of contacts	High Voltage Dielectric	ø A (mm)	Solder Contact Availability	Solder wire max AWG	Test Voltage AC (V)	Test Voltage DC (V)	Rated current (Amps)
2S	702	1HV 2LV	1.3 -	1.3 2.0	○	20 16	6300 1500	9000 2100	6 18
3S	702	1HV 2LV	1.3 -	1.3 2.0	○	20 16	6300 1500	9000 2100	6 18
	703	1HV 2LV	1.3 -	1.3 1.3	○	20 20	6300 2100	9000 3000	6 14
	704	1HV 4LV	1.3 -	1.3 1.3	○	20 20	6300 1050	9000 1500	6 10
	705	1HV 5LV	1.3 -	1.3 1.3	○	20 20	6300 1050	9000 1500	6 9
	706	1HV 6LV	1.3 -	1.3 1.3	○	20 20	6300 1050	9000 1500	6 8
	707	1HV 7LV	1.3 -	1.3 1.3	○	20 20	6300 1050	9000 1500	6 8
	708	1HV 8LV	1.3 -	1.3 4@1.3 4@.9	○	20 4@20 4@22	6300 1050	9000 1500	6 4@6 4@8
	709	1HV 9LV	1.3 -	1.3 0.9	○	20 22	6300 750	9000 1200	6 6
	711	1HV 11LV	1.3 -	1.3 0.9	○	20 22	6300 750	9000 1200	6 6
	432	2HV	1.3	1.3	○	20	6300	9000	6
	732	2HV 2LV	1.3 -	1.3 1.3	○	20 20	6300 2100	9000 3000	6 14
	734	2HV 4LV	1.3 -	1.3 1.3	○	20 20	6300 2100	9000 3000	6 10
4S	702	1HV 2LV	2.0 -	- 3.0	○	16 12	6300 2100	9000 3000	8 22
	703	1HV 3LV	2.0 -	- 2.0	○	16 16	6300 2100	9000 3000	8 16
	704	1HV 4LV	2.0 -	- 1.3	○	16 20	6300 2700	9000 3900	8 13
	705	1HV 5LV	2.0 -	- 1.3	○	16 20	6300 2100	9000 3000	8 11
	706	1HV 6LV	2.0 -	- 1.3	○	16 20	6300 2100	9000 3000	8 9
	707	1HV 7LV	2.0 -	- 1.3	○	16 20	6300 2100	9000 3000	8 9
	708	1HV 8LV	2.0 -	- 1.3	○	16 20	6300 2100	9000 3000	8 9
	709	1HV 9LV	2.0 -	- 0.9	○	16 22	6300 2100	9000 3000	8 7
	710	1HV 10LV	2.0 -	- 0.9	○	16 22	6300 2100	9000 3000	8 7

● Standard, typically 0-6 weeks delivery for quantities of 250 or less.
○ Non-standard product, contact LEMO USA, typically 6-12 weeks delivery for quantities of 250 or less.
Non-standard product is defined as any product which contains one or more components which are not standard.

Data Subject to Change

Mixed Contacts (High Voltage + Low Voltage)

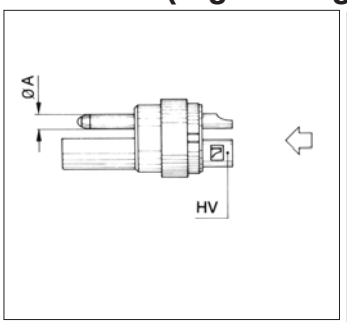

4S

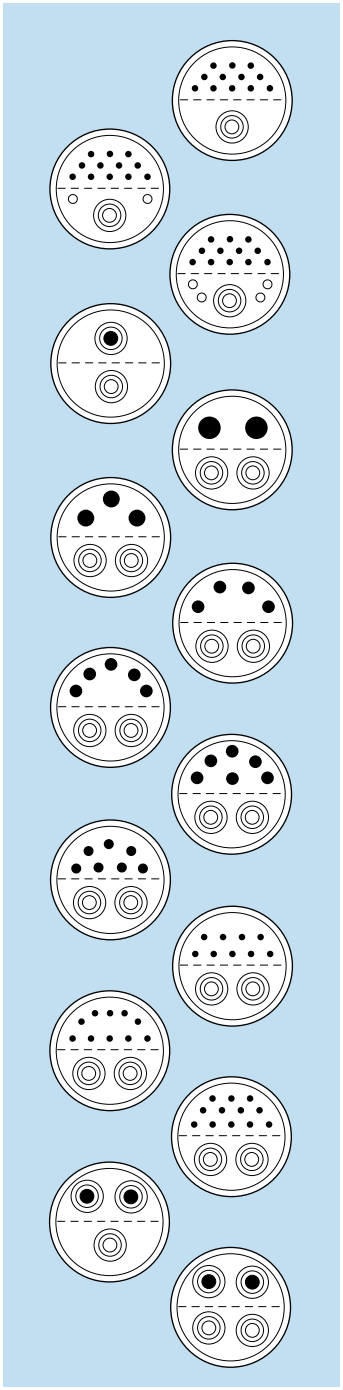

Reference	Number of contacts	High Voltage Dielectric	ø A (mm)	Solder Contact Availability	Solder wire max AWG	Test Voltage AC (V)	Test Voltage DC (V)	Rated current (Amps)
712	1HV 12LV	2.0 -	- 0.9	○	16 22	6300 2100	9000 3000	8 7
714	1HV 14LV	2.0 -	- 0.9	○	16 22	6300 2100	9000 3000	8 7
716	1HV 16LV	2.0 -	- 0.9	○	16 22	6300 1500	9000 2100	8 6
442	2HV	1.3	-	○	16	10500	15000	8
732	2HV 2LV	2.0 -	- 3.0	○	16 12	6300 2100	9000 3000	8 22
733	2HV 3LV	2.0 -	- 2.0	○	16 16	6300 2700	9000 3900	- 16
734	2HV 4LV	2.0 -	- 1.3	○	16 20	6300 2700	9000 3900	- 13
735	2HV 5LV	2.0 -	- 1.3	○	16 20	26300 2100	9000 3000	- 11
736	2HV 6LV	2.0 -	- 1.3	○	16 20	6300 2100	9000 3000	- 9
737	2HV 7LV	2.0 -	- 1.3	○	16 20	6300 2100	9000 3000	- 9
739	2HV 9LV	2.0 -	- 0.9	○	16 22	6300 2100	9000 3000	- 7
740	2HV 10LV	2.0 -	- 0.9	○	16 22	6300 2100	9000 3000	- 7
742	2HV 12LV	2.0 -	- 0.9	○	16 22	6300 2100	9000 3000	- 7
433	3HV	2.0	-	○	16	6300	9000	-
434	4HV	2.0	-	○	16	6300	9000	-

Data Subject to Change

● Standard, typically 0-6 weeks delivery for quantities of 250 or less.
○ Non-standard product, contact LEMO USA, typically 6-12 weeks delivery for quantities of 250 or less.
Non-standard product is defined as any product which contains one or more components which are not standard.

Mixed Contacts (High Voltage + Low Voltage)

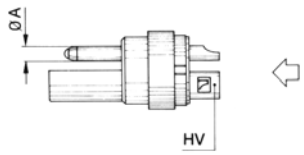

5S

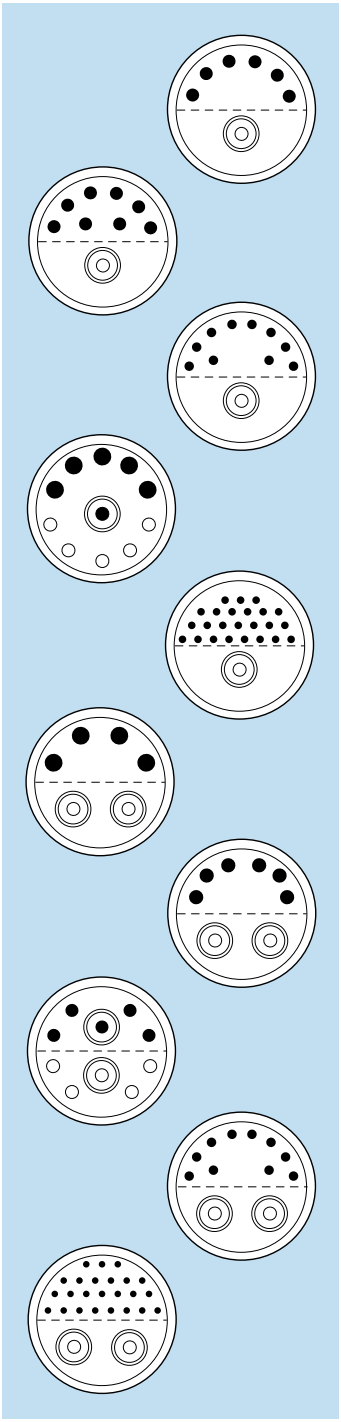

Reference	Number of contacts	High Voltage Dielectric	ø A (mm)	Solder Contact Availability	Solder wire max AWG	Test Voltage AC (V)	Test Voltage DC (V)	Rated current (Amps)
706	1HV 6LV	2.0 -	- 2.0	○	16 16	10500 2100	15000 3000	- 18
708	1HV 8LV	2.0 -	- 2.0	○	16 16	10500 1200	15000 1800	- 15
710	1HV 10LV	2.0 -	- 1.6	○	16 18	10500 1200	15000 1800	- 11
730	1HV 10LV	2.0 -	- 2.0	○	16 16	21000 1200	3000 1800	- 15
724	1HV 24LV	2.0 -	- 1.3	○	16 20	10500 1200	15000 1800`	- 6
734	2HV 4LV	2.0 -	- 3.0	○	16 12	10500 2100	15000 3000	- 22
736	2HV 6LV	2.0 -	- 2.0	○	16 16	10500 2100	15000 3000	- 18
738	2HV 8LV	2.0 -	- 2.0	○	16 16	10500 2100	15000 3000	- 15
740	2HV 10LV	2.0 -	- 1.6	○	16 18	10500 1800	15000 2400	- 11
754	2HV 24LV	2.0 -	- 1.3	○	16 20	10500 1200	15000 1800	- 6

● Standard, typically 0-6 weeks delivery for quantities of 250 or less.
○ Non-standard product, contact LEMO USA, typically 6-12 weeks delivery for quantities of 250 or less.
Non-standard product is defined as any product which contains one or more components which are not standard.

Mixed Contacts (High Voltage + Low Voltage)

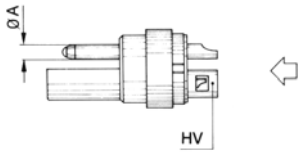

5S

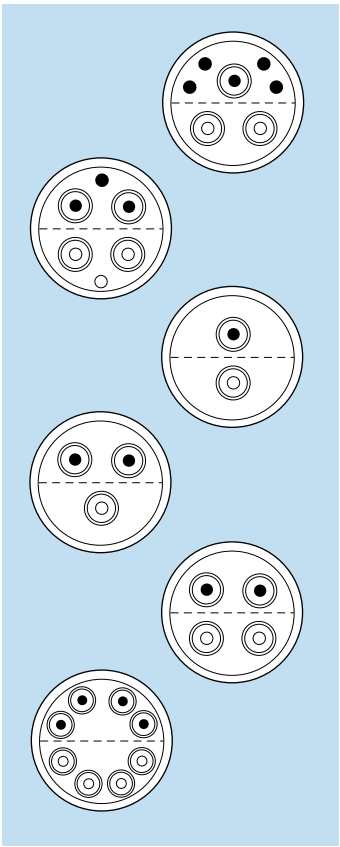

Reference	Number of contacts	High Voltage Dielectric	ø A (mm)	Solder Contact Availability	Solder wire max AWG	Test Voltage AC (V)	Test Voltage DC (V)	Rated current (Amps)
764	3HV 4LV	2.0 -	- 2.0	○	16 16	10500 1200	15000 1800	- 18
782	4HV 2LV	2.0 -	- 2.0	○	16 16	10500 1200	15000 1800	- 18
442	2HV	2.0	-	○	16	10500	15000	-
443	3HV	2.0	-	○	16	10500	15000	-
444	4HV	2.0	-	○	16	10500	15000	-
438	8HV	2.0	-	○	16	10500	15000	-

Data Subject to Change

● Standard, typically 0-6 weeks delivery for quantities of 250 or less.
○ Non-standard product, contact LEMO USA, typically 6-12 weeks delivery for quantities of 250 or less.
Non-standard product is defined as any product which contains one or more components which are not standard.

Mixed Contacts (Coaxial + Low Voltage)

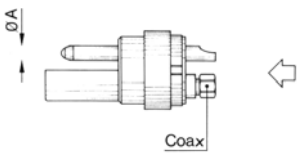

3S

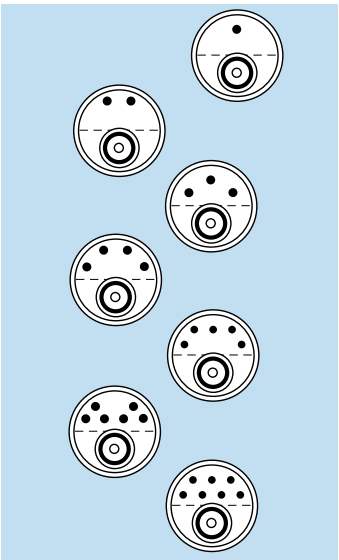

Reference	Number of contacts	Coax Impedance / Coax contact type	ø A (mm)	Solder Contact Availability	Solder wire max AWG	Coax[1] cable group	Test Voltage AC (V)	Test Voltage DC (V)	Rated current (Amps)
801	1 coax 1 multi	50 ohms Type A1	1.3	○	20	1-2-3 -	2100 2700	3000 3900	4 14
802	1 coax 2 multi	50 ohms Type A1	- 1.3	○	- 20	1-2-3 -	2100 1200	3000 1800	4 14
803	1 coax 3 multi	50 ohms Type A1	- 1.3	○	- 20	1-2-3 -	2100 2700	3000 3900	4 14
804	1 coax 4 multi	50 ohms Type A1	- 1.3	○	- 20	1-2-3 -	2100 1200	3000 1800	4 10
805	1 coax 5 multi	50 ohms Type A1	- 0.9	○	- 22	1-2-3 -	2100 1800	3000 2400	4 8
806	1 coax 6 multi	50 ohms Type A1	- 1.3	○	- 20	1-2-3 -	2100 750	3000 1200	4 8
807	1 coax 7 multi	50 ohms Type A1	- 0.9	○	- 22	1-2-3 -	2100 750	3000 1200	4 7

4S

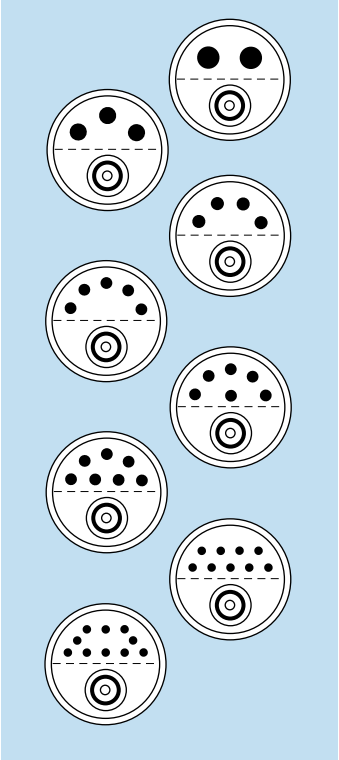

Reference	Number of contacts	Coax Impedance / Coax contact type	ø A (mm)	Solder Contact Availability	Solder wire max AWG	Coax[1] cable group	Test Voltage AC (V)	Test Voltage DC (V)	Rated current (Amps)
802	1 coax 2 multi	50 ohms Type A1	- 3.0	○	- 12	1-2-3 -	2100 2100	3000 3000	4 22
803	1 coax 3 multi	50 ohms Type A1	- 2.0	○	- 16	1-2-3 -	2100 2100	3000 3000	4 16
804	1 coax 4 multi	50 ohms Type A1	- 1.3	○	- 20	1-2-3 -	2100 2700	3000 3900	4 13
805	1 coax 5 multi	50 ohms Type A1	- 1.3	○	- 20	1-2-3 -	2100 2100	3000 3000	4 11
806	1 coax 6 multi	50 ohms Type A1	- 1.3	○	- 20	1-2-3 -	2100 2100	3000 3000	4 9
807	1 coax 7 multi	50 ohms Type A1	- 1.3	○	- 20	1-2-3 -	2100 2100	3000 3000	4 8
809	1 coax 9 multi	50 ohms Type A1	- 0.9	○	- 22	1-2-3 -	2100 2100	3000 3000	4 7
810	1 coax 10 multi	50 ohms Type A1	- 0.9	○	- 22	1-2-3 -	2100 2100	3000 3000	4 7

● Standard, typically 0-6 weeks delivery for quantities of 250 or less.
○ Non-standard product, contact LEMO USA, typically 6-12 weeks delivery for quantities of 250 or less.
Non-standard product is defined as any product which contains one or more components which are not standard.

Mixed Contacts (Coaxial + Low Voltage)

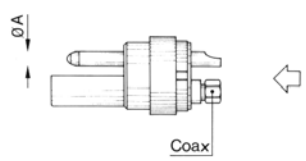

	Reference	Number of contacts	Coax Impedance / Coax contact type	ø A (mm)	Solder Contact Availability	Solder wire max AWG	Coax[1] cable group	Test Voltage AC (V)	Test Voltage DC (V)	Rated current (Amps)
4S	812	1 coax 12 multi	50 ohms Type A1	- 0.9	○	- 22	1-2-3 -	2100 2100	3000 3000	4 7
	202	2 coax	50 ohms Type A1	-	○	-	1-2-3	2100	3000	4
	832	2 coax 2 multi	50 ohms Type A1	- 1.3	○	- 20	1-2-3 -	2100 2100	3000 3000	4 13
	834	2 coax 4 multi	50 ohms Type A1	- 1.3	○	- 20	1-2-3 -	2100 2100	3000 3000	4 13
	836	2 coax 6 multi	50 ohms Type A1	- 0.9	○	- 22	1-2-3 -	2100 1800	3000 2400	4 7
	838	2 coax 8 multi	50 ohms Type A1	- 0.9	○	- 22	1-2-3 -	2100 1800	3000 2400	4 7
	842	2 coax 12 multi	50 ohms Type A1	- 0.9	○	- 22	1-2-3 -	2100 1800	3000 2400	4 7
5S	804	1 coax 4 multi	50 ohms Type A0	- 3.0	○	12	1-2-6 -	2100 1800	2400 2400	6 7
	810	1 coax 10 multi	50 ohms Type A1	- 1.6	○	- 18	1-2-3 -	2100 1800	3000 2400	4 11
	232	2 coax	50 ohms Type A0	-	○	-	1-2-6	3000	4200	6
	282	2 coax	50 ohms Type A1	-	○	-	6	3000	4200	12
	292	2 coax	75 ohms Type A	-	○	-	4-5-7	2400	3300	10
	832	2 coax 2 multi	50 ohms Type A0	- 2.0	○	- 16	1-2-6 -	3000 2100	4200 3000	6 18

Data Subject to Change

● Standard, typically 0-6 weeks delivery for quantities of 250 or less.
○ Non-standard product, contact LEMO USA, typically 6-12 weeks delivery for quantities of 250 or less.
Non-standard product is defined as any product which contains one or more components which are not standard.

Mixed Contacts (Coaxial + Low Voltage)

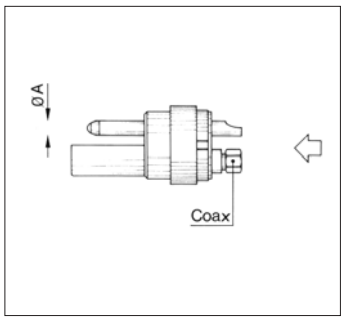

5S

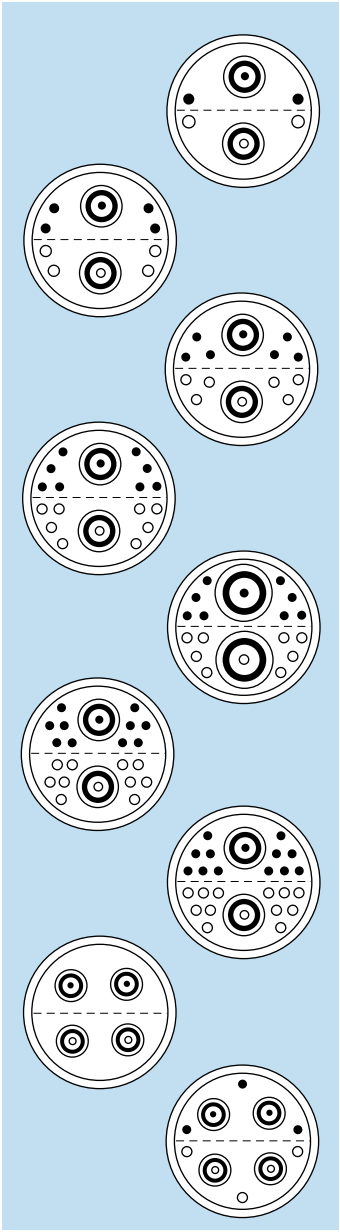

Reference	Number of contacts	Coax Impedance / Coax contact type	ø A (mm)	Solder Contact Availability	Solder wire max AWG	Coax[1] cable group	Test Voltage AC (V)	Test Voltage DC (V)	Rated current (Amps)
834	2 coax 4 multi	50 ohms Type A0	- 2.0	○	- 16	1-2-6 -	3000 2100	4200 3000	6 18
838	2 coax 8 multi	50 ohms Type A0	- 1.6	○	- 18	1-2-6 -	3000 1100	4200 2400	6 12
842	2 coax 12 multi	50 ohms Type A0	- 1.3	○	- 20	1-2-6 -	2100 2100	3000 2400	6 9
846	2 coax 16 multi	50 ohms Type A0	- 1.3	○	- 20	1-2-6 -	3000 750	4200 1200	6 8
846	2 coax 16 multi	75 ohms Type A	- 1.3	○	- 20	4-5-7 -	2400 750	3300 1200	10 8
850	2 coax 20 multi	50 ohms Type A0	- 1.3	○	- 20	1-2-6 -	3000 750	4200 1200	6 7
854	2 coax 24 multi	50 ohms Type A0	- 1.3	○	- 20	1-2-6 -	3000 750	4200 1200	6 6
234	4 coax	50 ohms Type A1	-	○	-	1-2-3	2100	3000	4
876	4 coax 6 multi	50 ohms Type A1	- 1.3	○	- 20	1-2-3 -	2100 750	3000 1200	4 6

● Standard, typically 0-6 weeks delivery for quantities of 250 or less.
○ Non-standard product, contact LEMO USA, typically 6-12 weeks delivery for quantities of 250 or less.
Non-standard product is defined as any product which contains one or more components which are not standard.

Mixed Contacts (Coaxial + Low Voltage)

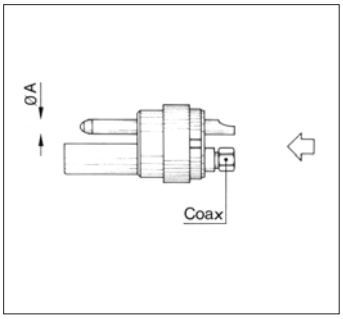

6S

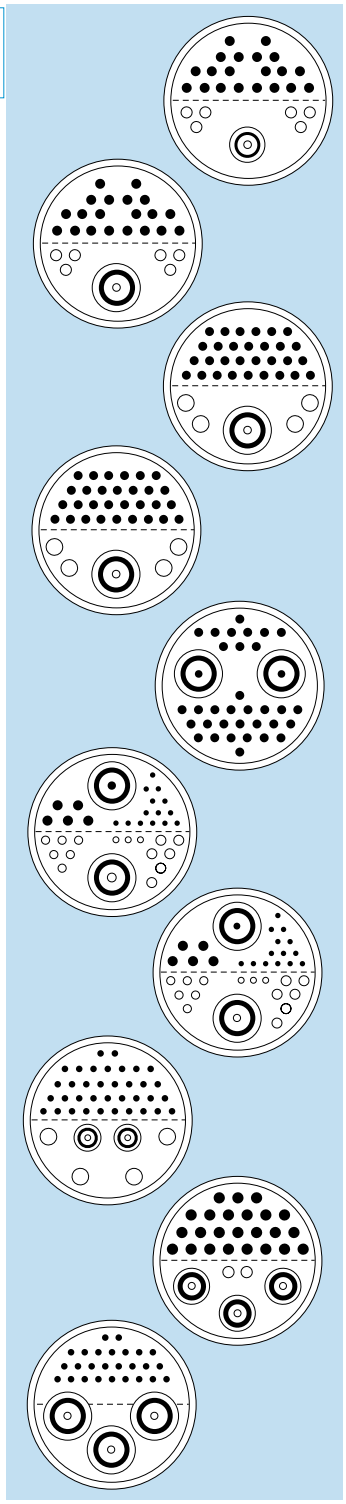

Reference	Number of contacts	Coax Impedance / Coax contact type	ø A (mm)	Solder Contact Availability	Solder wire max AWG	Coax[1] cable group	Test Voltage AC (V)	Test Voltage DC (V)	Rated current (Amps)
826	1 coax 26 multi	50 ohms Type A0	- 2.0	○	- 16	1-2-6 -	3000 1500	4200 2100	6 7
826	1 coax 26 multi	75 ohms Type A	- 2.0	○	- 16	4-5-7 -	2400 1500	3300 2100	10 7
830	1 coax 34 multi	50 ohms Type A	- 4 @ 3.0 30 @ 1.6	○	- 4 @ 12 30 @ 18	6 4-5-7	3000 1500	4200 2100	12 4 @14 30 @ 5
830	1 coax 34 multi	75 ohms Type A	- 4 @ 3.0 30 @ 1.6	○	- 4 @ 12 4 @ 18	6 4-5-7	2400 1500	3300 2100	10 4 @ 10 30 @ 14
857	2 coax 33 multi	50 ohms Type A	- 1.3	○	- 20	4-5-7 -	2400 1200	3300 1800	10 4
858	2 coax 34 multi	50 ohms Type A	- 6 @ 1.3 6 @ 1.6 5 @ 2.0 17 @ 0.9	○	- 20 18 16 22	6 - -	3000 1200	4200 1800	12 4 5 10 2
858	2 coax 34 multi	75 ohms Type A	- 6 @ 1.3 6 @ 1.6 5 @ 2.0 17 @ 0.9	○	- 20 18 16 22	4-5-7	2100 1200	3000 1800	10 4 5 10 7
859	2 coax 40 multi	50 ohms Type A1	- 4 @3.0 36 @1.3	○	- 4 @ 12 36 @ 20	1-2-3 -	2100 1200	3000 1800	10 4 @ 14 36 @ 4
866	3 coax 26 multi	50 ohms Type A0	- 2.0	○	- 16	1-2-6 -	13000 1200	4200 1800	6 7
866	3 coax 26 multi	75 ohms Type A	- 1.3	○	- 16	4-5-7 -	2400 1000	3300 2100	10 4

Data Subject to Change

● Standard, typically 0-6 weeks delivery for quantities of 250 or less.
○ Non-standard product, contact LEMO USA, typically 6-12 weeks delivery for quantities of 250 or less.
Non-standard product is defined as any product which contains one or more components which are not standard.

Mixed Contacts (Coaxial + Low Voltage)

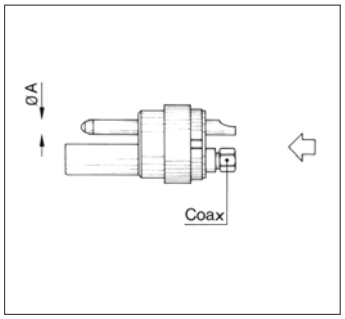

6S

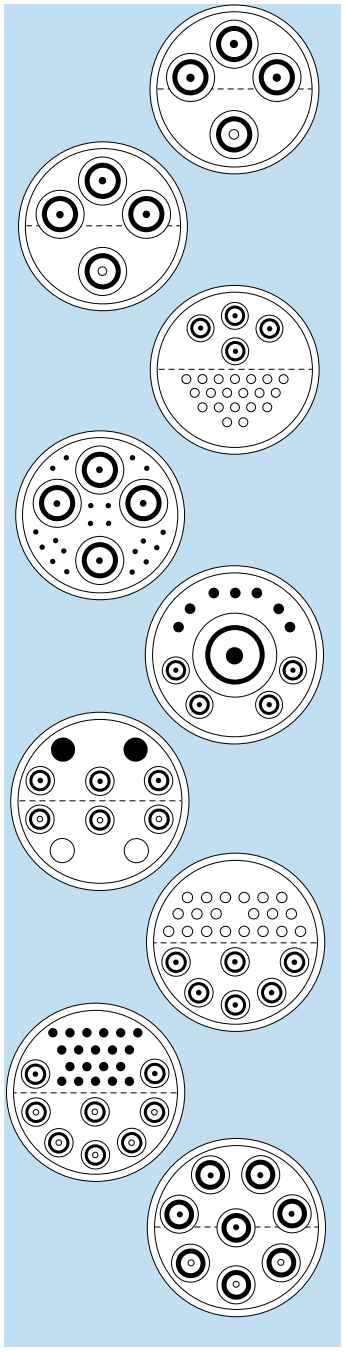

Reference	Number of contacts	Coax Impedance / Coax contact type	ø A (mm)	Solder Contact Availability	Solder wire max AWG	Coax[1] cable group	Test Voltage AC (V)	Test Voltage DC (V)	Rated current (Amps)
284	4 coax	50 ohms Type A	-	○	-	6	3000	4200	12
294	4 coax	75 ohms Type A	-	○	-	6	2400	3300	10
880	4 coax 20 multi	50 ohms Type A1	- 1.3	○	- 20	4-5-7 -	2100 1200	3000 1800	4 4
882	4 coax 26 multi	75 ohms Type A	- 0.9	○	- 22	4-5-7 -	2400 750	3300 1200	10 2
887	5 coax 7 multi	50 ohms 1@Type A3 4@Type A1 -	- - 2.0	○	- - 16	1@9 4@1-2-3 -	3000 2100 1000	4200 3000 2100	26 4 10
890	6 coax 4 multi	50 ohms Type A1	- 4.0	○	- 10	1-2-3 -	2100 1500	3000 2100	4 16
893	6 coax 20 multi	50 ohms Type A1	- 1.6	○	- 18	1-2-3 -	2100 1500	3000 2100	4 5
238	8 coax	50 ohms Type A0	-	○	-	1-2-6	3000	4200	6
899	8 coax 20 multi	50 ohms Type A1	- 1.6	○	- 18	1-2-3 -	2100 1500	3000 2100	5 7

● Standard, typically 0-6 weeks delivery for quantities of 250 or less.
○ Non-standard product, contact LEMO USA, typically 6-12 weeks delivery for quantities of 250 or less.
Non-standard product is defined as any product which contains one or more components which are not standard.

Technical Information

Example of high voltage contact construction for mixed high voltage and multi high voltage connectors

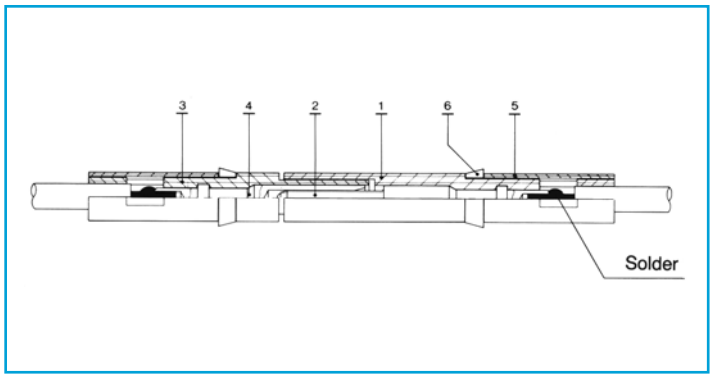

The high voltage contact is permanently fixed into the inserts. The conductor is secured by solder.

Component	Material	Surface Treatment		
		Cu	Ni	Au
1 Insert	PTFE (ASTM D 1457-83)			
2 Male Contact	Brass (UNS C 385)	0.5	3	1.5
3 Insert	PTFE (ASTM D 1457-83)			
4 Female Contact	Bronze (UNS C 544)	0.5	3	2.5
5 Insert Tube	PTFE (ASTM D 1457-83)			
6 Clips	Brass (UNS C 385)	0.5	3	

Example of coaxial contact construction for mixed coax and multi coax connectors

Coaxial type A0, A, A1 and type A3

The coaxial of this type is permanetly fixed into the insert. The conductor is secured by solder and the shield by crimping.

The coax contact is permanently fixed into the inserts. The conductor is secured by solder and the shield by crimping.

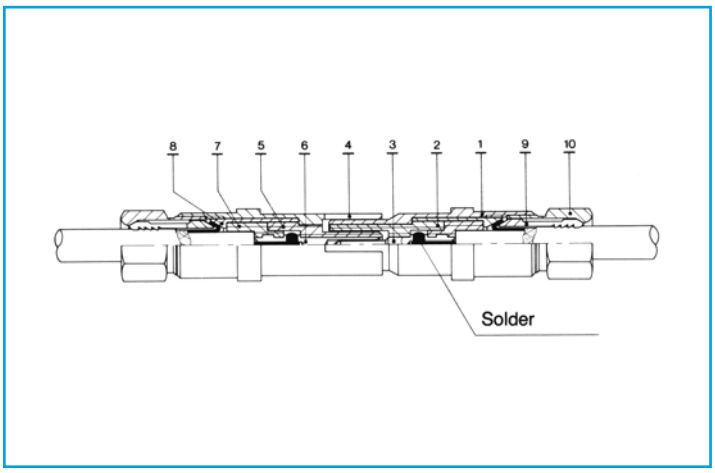

Component	Material	Surface Treatment		
		Cu	Ni	Au
1 Male Sleeve	Brass (UNS C 385)	0.5	3	1.5
2 Insert	PTFE (UNS D 1457-83)			
3 Male Contact	Brass (UNS C 385)	0.5	3	1.5
4 Female Sleeve	Bronze (UNS C 544)	0.5	3	2.0
5 Insert	PFTE (UNS D 1457-83)			
6 Female Contact	Bronze (UNS C 544)	0.5	3	2.5
7 Insulating Sleeve	PTFE (UNS D 1457-83)			
8 Grounding Sleeve	Brass (UNS C 385)	0.5	3	
9 Collet	Brass (UNS C 187)	0.5	3	
10 Ferrule	Brass (UNS C 385)	0.5	3	

Technical characteristics of coax contacts

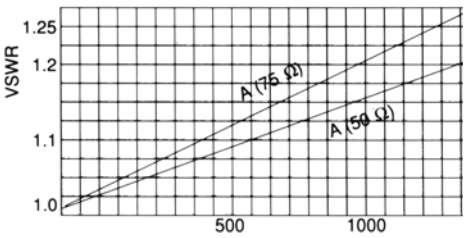

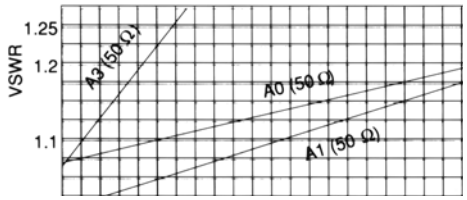

The coaxial part is permanetly fixed in the main insert. The inner conductomer of the cable is soldered to the contact while the outer conductor is clamped by the collet.

Characteristics	Unit	Coax Type A		Coax Type A0	Coax Type A1	Coax Type A3
Impedance	Ω	50	75	50	50	50
Operating voltage at 50 Hz	AC	600	800	1000	300	1000
Test voltage at 50 Hz	AC	1800	2300	300	800	3000
Rated current	A	12	7	7	5	15
Insulating resisance	Ω	$>10_{12}$	$>10_{12}$	$>10_{12}$	$>10_{12}$	$>10_{12}$
Contact resistance	mΩ	2.0	2.9	4.5	3.8	2.0
Shell to shell resistance	mΩ	1.8	1.8	1.0	3.0	1.0
VSWR (f = GHz)		1.01 +0.156f	1.01 +0.063f	1.06 +0.1f	1.04 +0.127f	1.06 +0.5f

Data Subject to Change

Recommended coaxial cable for mixed coax and multicoax connectors

Type	Group 1) 1	2	3	5	6	7
RG.58 C/U				■		
RG.59 B/U					■	
RG.115 A/U						■
RG.122 /U			■			
RG.142 B/U				■		
RG.165 /U						■
RG.174 A/U		■				
RG.178 B/U	■					

Type	Group 1) 1	2	3	5	6	7
RG.188 A/U		■				
RG.196 A/U	■					
RG.213 /U						■
RG.223 /U					■	
RG.302 /U				■		
RG.316 /U		■				
RG.400 /U				■		
CCE.99.281.505 LEMO			■			

1) The cable group number corrresponding to the chosen cable must be written in the variant position of the part number.

Contact configuration for RMA, RAD and SWH fixed couplers

A Male - Female

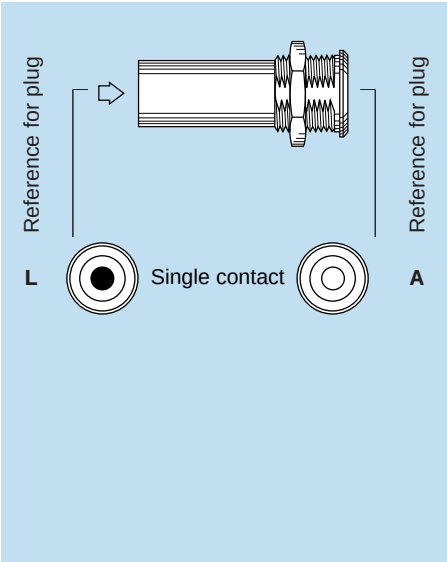

L Female - Male

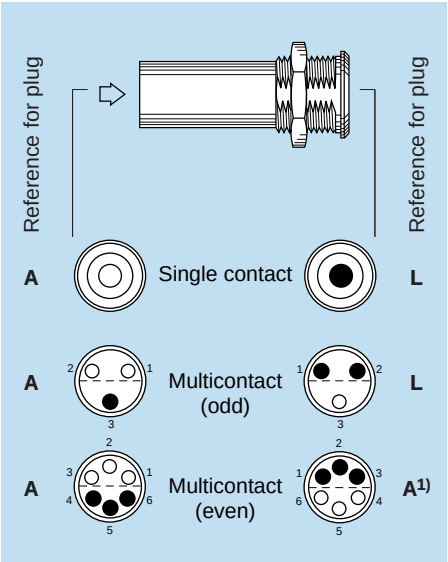

M Female - Female

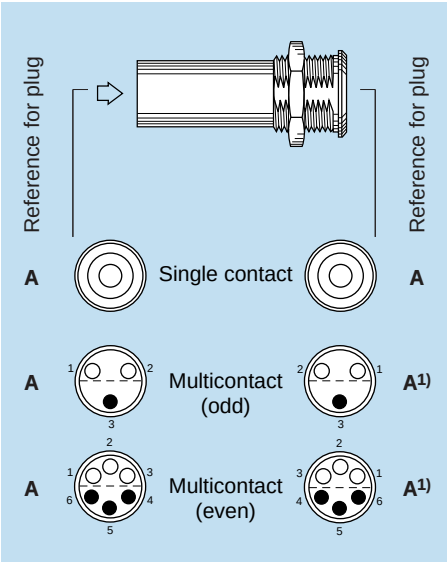

Use of plugs for mating with RAD, RMA and SWH couplers

Single contact type:

Reference M For coupling two identical plugs fitted with male contact (contact reference A).
Reference L For coupling a plug fitted with male contacts (contact reference A) at the flange end for RAD and SWH and an inverted plug fitted with female contacts (contact reference L) at the other end.
Reference A For the inverted version of code L.

Multicontact type:

Reference L For coupling a standard plug (contact reference A) at the flange end for RAD and SWH and an inverted plug (contact reference as indicated in the above table) at the other end.
Reference M For coupling two standard plugs (contact type A).
Only available for RAD and RMA models.

Note: 1) This connector combination does not allow for contact numbering. One of the plugs has to be cable mounted in a way to ensure correct signal continuity.

•Housings

Ref.	Material	Surface treatment		Note
		Outer shell and collet nut	Latch sleeve and grounding crown	
C	Brass[1)]	chrome	nickel	■
D	Brass	gold-plated	nickel	□
N	Brass	nickel	nickel	□
K	Brass	black chrome	nickel	□
S	Stainless steel	without treatment	nickel-plated brass	□
T	Stainless steel	without treatment	stainless steel	□
U	Stainless steel[2)]	without treatment	stainless steel	□
L	Aluminium alloy[3)]	anodized	nickel-plated brass	□
B	POM black[4)]	without treatment	nickel-plated brass	□
H	PPS/brass[5)]	without treat./nickel	nickel	□
G	PEEK[4)]	without treatment	nickel-plated brass	□
P	PSU[6)]	without treatment	nickel-plated brass	□
R	PPSU[7)]	without treatment	nickel-plated brass	□

Note:
1) In the E series the latch sleeve is chrome-plated.
2) The other metallic components are in stainless steel.
3) The «variant» position of the reference is used to specify the anodized color.
4) Only available for FFP, ERN and PCP models of the S series.
5) For S series EPL and EXP elbow (90°) receptacles for printed circuit.
6) Available only for the FFL model of the S series. See colors in «variant» position.
7) Available only for the FFL model of the S series.
Detailed characteristics of these materials are presented on page 5.

■ First choice alternative □ Special order alternative

•Insulators

Ref.	Material or form	Note
L	PEEK	■
T	PTFE [1)]	■
T	FEP [2)]	□

Ref.	Material or form	Note
V	PI [2)]	□
N	PA6.6 [3)]	■

Note:
1) Only for single contact types.
2) Only for multicontact types.
3) Material for 5S and 6S series multicontact inserts.
Detailed characteristics of these materials are presented on page 7.

■ First choice alternative □ Special order alternative

•Contacts

Contacts for plugs, free or fixed receptacles

Ref.	Contact type
A	Male solder
C	Male crimp [1) 4)]
L	Female solder
M	Female crimp [2) 4)]
N	Female printed circuit (straight)
V	Female printed circuit (elbow)

Multicontact connectors are fitted with hermaphroditic inserts including male and female contacts. However, by convention, the letter indicating the contact type in the part number composition will be the male contact (reference A) for plugs and female contact (reference L) for receptacles.

In case of an odd number of contacts, the letter of reference corresponds to the one with the larger number of contacts. For example, a 309 type connector with contact (reference A) will include 5 male and 4 female contacts.

Contacts for couplers and plug with receptacle

Ref.	Contact type	single contact	multicontact
A	Male - Female	□	–
L	Female - Male	□	■
M	Female - Female	■	□
F	Female - Female - Male [3)]	■	■

For RAD and SWH fixed couplers, the first contact type mentioned is always the one at the flange end. Contact configuration and receptacles to be used for a connection are explained on the following page.

Note:
1) For the FFS model of the 00 series and FFA or FFL models of the S series.
2) For the PSS model of the 00 series and PCA or PSA models of the S series.
3) For the FTA model of the S series.
4) For conductor range that can fit with crimp contacts consult page 10.

Connectors can be configured « inverted» i.e. plugs equiped with female contacts (reference L), receptacles with male contacts (reference A). This solution is particularly useful when plugs are mated to a coupler and it is essential to respect contact alignment (see previous page).

● Standard, typically 0-6 weeks delivery for quantities of 250 or less.
○ Non-standard product, contact LEMO USA, typically 6-12 weeks delivery for quantities of 250 or less.
Non-standard product is defined as any product which contains one or more components which are not standard.

Collets

C, K and L type collets

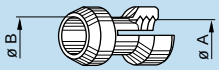

C or K type collets

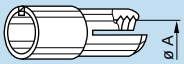

L type collets

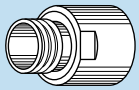

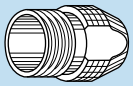

	Reference		Collet		Cable ø		Part number of the collet [1]	Part number of the oversize collet and of the split center-pieces [3]	Part number of the collet nut [3] [5]	Avail-ability
	Type	ø	ø A	ø B	max.	min.				
00	C	15	1.5	–	1.4	1.1	FFA.00.715.CN	–	FFA.00.130.LC	○
	C	17	1.7	1.5	1.6	1.3	FFA.00.717.CN	–	FFA.00.130.LC	●
	C	22	2.2	–	2.1	1.7	FFA.00.722.CN	–	FFA.00.130.LC	●
	C	27	2.7	–	2.6	2.2	FFA.00.727.CN	–	FFA.00.130.LC	●
	C	29	2.9	2.4	2.8	2.4	FFA.00.729.CN	–	FFA.00.130.LC	●
	C	31	3.1	2.7	3.0	2.6	FFA.00.731.CN	–	FFA.00.130.LC	●
	K	37	3.7	–	3.6	3.0	FFA.0S.737.CN	FFA.00.137.LCN	FFA.0S.130.LC	●
	K	42	4.2	3.7	4.1	3.3	FFA.0S.742.CN	FFA.00.137.LCN	FFA.0S.130.LC	●
	C	16	1.6	–	1.5	1.2	FFC.00.716.CN [2]	–	FFA.00.130.LC	○
	C	19	1.9	1.6	1.8	1.5	FFC.00.719.CN [2]	–	FFA.00.130.LC	○
	C	22	2.2	1.6	2.1	1.7	FFC.00.722.CN [2]	–	FFA.00.130.LC	○
	C	27	2.7	2.4	2.6	2.2	FFC.00.727.CN [2]	–	FFA.00.130.LC	●
	C	29	2.9	2.4	2.8	2.4	FFC.00.729.CN [2]	–	FFA.00.130.LC	○
	C	31	3.1	2.4	3.0	2.6	FFC.00.731.CN [2]	–	FFA.00.130.LC	○
	L	17	1.7	–	1.6	1.3	FFA.00.717.LN	–	FFA.00.130.LC	○
	L	22	2.2	–	2.1	1.7	FFA.00.722.LN	–	FFA.00.130.LC	○
	L	27	2.7	–	2.6	2.2	FFA.00.727.LN	–	FFA.00.130.LC	○
	L	29	2.9	–	2.8	2.4	FFA.00.729.LN	–	FFA.00.130.LC	○
	L	31	3.1	–	3.0	2.6	FFA.00.731.LN	–	FFA.00.130.LC	○
0S	C	17	1.7	–	1.6	1.3	FFA.0S.717.CN	–	FFA.0S.130.LC	○
	C	22	2.2	–	2.1	1.7	FFA.0S.722.CN	–	FFA.0S.130.LC	○
	C	27	2.7	–	2.6	2.2	FFA.0S.727.CN	–	FFA.0S.130.LC	●
	C	32	3.2	–	3.1	2.7	FFA.0S.732.CN	–	FFA.0S.130.LC	●
	C	37	3.7	–	3.6	3.0	FFA.0S.737.CN	–	FFA.0S.130.LC	●
	C	42	4.2	3.7	4.1	3.3	FFA.0S.742.CN	–	FFA.0S.130.LC	●
	C	44	4.4	3.7	4.3	3.5	FFA.0S.744.CN	–	FFA.0S.132.LC	●
	K	47	4.7	–	4.6	3.8	FFA.1S.747.CN	FFA.0S.137.LCN	FFA.1S.130.LC	●
	K	52	5.2	–	5.1	4.3	FFA.1S.752.CN	FFA.0S.137.LCN	FFA.1S.130.LC	●
	K	57	5.7	–	5.6	4.8	FFA.1S.757.CN	FFA.0S.137.LCN	FFA.1S.130.LC	●
	K	62	6.2	5.2	6.1	5.3	FFA.1S.762.CN	FFA.0S.137.LCN	FFA.1S.130.LC	●
	K	66	6.6	5.4	6.5	5.9	FFA.1S.766.CN	FFA.0S.137.LCN	FFA.1S.131.LC	○
	K	68	6.8	–	6.7	6.0	FFA.1S.768.CN [6]	FFA.0S.137.LCN	FFA.1S.131.LC	○
	C	17	1.7	–	1.6	1.3	FLA.0S.717.CN [4]	–	FFA.0S.130.LC	○
	C	22	2.2	–	2.1	1.7	FLA.0S.722.CN [4]	–	FFA.0S.130.LC	○
	C	27	2.7	–	2.6	2.2	FLA.0S.727.CN [4]	–	FFA.0S.130.LC	○
	C	32	3.2	–	3.1	2.7	FLA.0S.732.CN [4]	–	FFA.0S.130.LC	○
	C	37	3.7	–	3.6	3.0	FLA.0S.737.CN [4]	–	FFA.0S.130.LC	○
	C	42	4.2	3.7	4.1	3.3	FLA.0S.742.CN [4]	–	FFA.0S.130.LC	○
	C	44	4.4	3.7	4.3	3.5	FLA.0S.744.CN [4]	–	FFA.0S.132.LC	○
	L	17	1.7	–	1.6	1.3	FFA.0S.717.LN	–	FFA.0S.130.LC	○
	L	22	2.2	–	2.1	1.7	FFA.0S.722.LN	–	FFA.0S.130.LC	○
	L	27	2.7	–	2.6	2.2	FFA.0S.727.LN	–	FFA.0S.130.LC	○
	L	32	3.2	–	3.1	2.7	FFA.0S.732.LN	–	FFA.0S.130.LC	○
	L	37	3.7	–	3.6	3.0	FFA.0S.737.LN	–	FFA.0S.130.LC	○
	L	42	4.2	–	4.1	3.3	FFA.0S.742.LN	–	FFA.0S.130.LC	○
	L	44	4.4	–	4.3	3.5	FFA.0S.744.LN	–	FFA.0S.132.LC	○

Note: See following page for text of notes [1] through [6].
All dimensions are in millimeters.

● Standard, typically 0-6 weeks delivery for quantities of 250 or less.
○ Non-standard product, contact LEMO USA, typically 6-12 weeks delivery for quantities of 250 or less.
Non-standard product is defined as any product which contains one or more components which are not standard.

C, K and L type collets

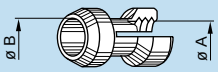

C or K type collet

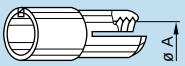

L type collet

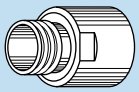

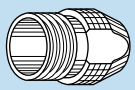

1S

Reference		Collet		Cable ø		Part number of the collet 1)	Part number of the oversize collet and of the split center-pieces 3)	Part number of the collet nut 3) 5)	Avail-ability
Type	ø	ø A	ø B	max.	min.				
C	17	1.7	–	1.6	1.3	FFA.1S.717.CN	–	FFA.1S.130.LC	○
C	22	2.2	–	2.1	1.7	FFA.1S.722.CN	–	FFA.1S.130.LC	○
C	27	2.7	–	2.6	2.2	FFA.1S.727.CN	–	FFA.1S.130.LC	●
C	32	3.2	–	3.1	2.6	FFA.1S.732.CN	–	FFA.1S.130.LC	●
C	37	3.7	–	3.6	2.7	FFA.1S.737.CN	–	FFA.1S.130.LC	○
C	42	4.2	–	4.1	3.3	FFA.1S.742.CN	–	FFA.1S.130.LC	●
C	47	4.7	–	4.6	3.8	FFA.1S.747.CN	–	FFA.1S.130.LC	●
C	52	5.2	–	5.1	4.3	FFA.1S.752.CN	–	FFA.1S.130.LC	●
C	57	5.7	–	5.6	4.8	FFA.1S.757.CN	–	FFA.1S.130.LC	●
C	62	6.2	5.2	6.1	5.3	FFA.1S.762.CN	–	FFA.1S.130.LC	●
C	66	6.6	5.4	6.5	5.9	FFA.1S.766.CN 6)	–	FFA.1S.131.LC	○
C	68	6.8	–	6.7	6.0	FFA.1S.768.CN 6)	–	FFA.1S.131.LC	○
K	72	7.2	6.7	7.0	6.1	FFA.2S.772.CN	FFA.1S.137.LCN	FFA.2S.130.LC	○
K	77	7.7	6.7	7.5	7.1	FFA.2S.777.CN	FFA.1S.137.LCN	FFA.2S.130.LC	○
K	82	8.2	6.7	8.0	7.6	FFA.2S.782.CN	FFA.1S.137.LCN	FFA.2S.130.LC	○
K	87	8.7	6.7	8.5	8.1	FFA.2S.787.CN	FFA.1S.137.LCN	FFA.2S.130.LC	○
C	17	1.7	–	1.6	1.3	FLA.1S.717.CN 4)	–	FFA.1S.130.LC	○
C	22	2.2	–	2.1	1.7	FLA.1S.722.CN 4)	–	FFA.1S.130.LC	○
C	27	2.7	–	2.6	2.2	FLA.1S.727.CN 4)	–	FFA.1S.130.LC	○
C	32	3.2	–	3.1	2.6	FLA.1S.732.CN 4)	–	FFA.1S.130.LC	○
C	37	3.7	–	3.6	2.7	FLA.1S.737.CN 4)	–	FFA.1S.130.LC	○
C	42	4.2	–	4.1	3.3	FLA.1S.742.CN 4)	–	FFA.1S.130.LC	○
C	47	4.7	–	4.6	3.8	FLA.1S.747.CN 4)	–	FFA.1S.130.LC	○
C	52	5.2	–	5.1	4.3	FLA.1S.752.CN 4)	–	FFA.1S.130.LC	○
C	57	5.7	–	5.6	4.8	FLA.1S.757.CN 4)	–	FFA.1S.130.LC	○
C	62	6.2	5.2	6.1	5.3	FLA.1S.762.CN 4)	–	FFA.1S.130.LC	○
C	66	6.6	5.4	6.5	5.9	FLA.1S.766.CN 4)	–	FFA.1S.131.LC	○
C	68	6.8	5.5	6.7	6.0	FLA.1S.768.CN 4)	–	FFA.1S.131.LC	○
L	17	1.7	–	1.6	1.3	FFA.1S.717.LN	–	FFA.1S.130.LC	○
L	22	2.2	–	2.1	1.7	FFA.1S.722.LN	–	FFA.1S.130.LC	○
L	27	2.7	–	2.6	2.2	FFA.1S.727.LN	–	FFA.1S.130.LC	○
L	32	3.2	–	3.1	2.6	FFA.1S.732.LN	–	FFA.1S.130.LC	○
L	37	3.7	–	3.6	2.7	FFA.1S.737.LN	–	FFA.1S.130.LC	○
L	42	4.2	–	4.1	3.3	FFA.1S.742.LN	–	FFA.1S.130.LC	○
L	47	4.7	–	4.6	3.8	FFA.1S.747.LN	–	FFA.1S.130.LC	○
L	50	5.0	–	4.9	4.7	FFA.1S.750.LN	–	FFA.1S.130.LC	○
L	52	5.2	–	5.1	4.3	FFA.1S.752.LN	–	FFA.1S.130.LC	○
L	57	5.7	–	5.6	4.8	FFA.1S.757.LN	–	FFA.1S.130.LC	○
L	62	6.2	–	6.1	5.3	FFA.1S.762.LN	–	FFA.1S.130.LC	○
L	66	6.6	–	6.5	5.9	FFA.1S.766.LN	–	FFA.1S.131.LC	○

Note:
1) For ordering collets separately.
2) These collets can only be used with the FLA model.
3) For ordering a K type collet separately, the oversize collet and the corresponding collet nut should also be ordered.
4) These collets should be used with FLA, FFP and PCP models.
5) For models with bend relief, the FFM.●●.130.LC collet nut should be ordered (see page 110).
6) These collets cannot be used for connector models with collet nut for fitting a bend relief.
All dimensions are in millimeters.

● Standard, typically 0-6 weeks delivery for quantities of 250 or less.
○ Non-standard product, contact LEMO USA, typically 6-12 weeks delivery for quantities of 250 or less.
Non-standard product is defined as any product which contains one or more components which are not standard.

C, K and L type collets

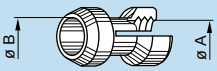

C or K type collet

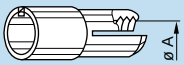

L type collet

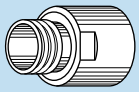

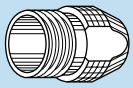

2S

Reference		Collet		Cable ø		Part number of the collet 1)	Part number of the oversize collet and of the split center-pieces 3)	Part number of the collet nut 3) 5)	Avail-ability
Type	ø	ø A	ø B	max.	min.				
C	17	1.7	–	1.6	1.3	FFA.2S.717.CN	–	FFA.2S.130.LC	○
C	27	2.7	–	2.5	1.7	FFA.2S.727.CN	–	FFA.2S.130.LC	○
C	32	3.2	–	3.0	2.5	FFA.2S.732.CN	–	FFA.2S.130.LC	○
C	42	4.2	–	4.0	3.1	FFA.2S.742.CN	–	FFA.2S.130.LC	○
C	52	5.2	–	5.0	4.1	FFA.2S.752.CN	–	FFA.2S.130.LC	○
C	62	6.2	–	6.0	5.1	FFA.2S.762.CN	–	FFA.2S.130.LC	●
C	72	7.2	6.7	7.0	6.1	FFA.2S.772.CN	–	FFA.2S.130.LC	●
C	77	7.7	6.7	7.5	7.1	FFA.2S.777.CN	–	FFA.2S.130.LC	○
C	82	8.2	6.7	8.0	7.6	FFA.2S.782.CN	–	FFA.2S.130.LC	○
C	87	8.7	6.7	8.5	8.1	FFA.2S.787.CN	–	FFA.2S.130.LC	○
K	92	9.2	8.7	9.0	8.1	FFA.3S.792.CN	FFA.2S.137.LCN	FFA.3S.130.LC	○
K	97	9.7	8.7	9.5	9.1	FFA.3S.797.CN	FFA.2S.137.LCN	FFA.3S.130.LC	○
K	10	10.2	8.7	10.0	9.6	FFA.3S.710.CN	FFA.2S.137.LCN	FFA.3S.130.LC	○
K	11	10.7	9.0	10.5	10.1	FFA.3S.711.CN	FFA.2S.137.LCN	FFA.3S.130.LC	○
C	17	1.7	–	1.6	1.3	FLA.2S.717.CN 4)	–	FFA.2S.130.LC	○
C	27	2.7	–	2.5	1.7	FLA.2S.727.CN 4)	–	FFA.2S.130.LC	○
C	32	3.2	–	3.0	2.5	FLA.2S.732.CN 4)	–	FFA.2S.130.LC	○
C	42	4.2	–	4.0	3.1	FLA.2S.742.CN 4)	–	FFA.2S.130.LC	○
C	52	5.2	–	5.0	4.1	FLA.2S.752.CN 4)	–	FFA.2S.130.LC	○
C	62	6.2	–	6.0	5.1	FLA.2S.762.CN 4)	–	FFA.2S.130.LC	○
C	72	7.2	6.7	7.0	6.1	FLA.2S.772.CN 4)	–	FFA.2S.130.LC	○
C	77	7.7	6.7	7.5	7.1	FLA.2S.777.CN 4)	–	FFA.2S.130.LC	○
C	82	8.2	6.7	8.0	7.6	FLA.2S.782.CN 4)	–	FFA.2S.130.LC	○
C	87	8.7	6.7	8.5	8.1	FLA.2S.787.CN 4)	–	FFA.2S.130.LC	○
L	27	2.7	–	2.5	1.7	FFA.2S.727.LN	–	FFA.2S.130.LC	○
L	32	3.2	–	3.0	2.5	FFA.2S.732.LN	–	FFA.2S.130.LC	○
L	42	4.2	–	4.0	3.1	FFA.2S.742.LN	–	FFA.2S.130.LC	○
L	52	5.2	–	5.0	4.1	FFA.2S.752.LN	–	FFA.2S.130.LC	○
L	62	6.2	–	6.0	5.1	FFA.2S.762.LN	–	FFA.2S.130.LC	○
L	72	7.2	–	7.0	6.1	FFA.2S.772.LN	–	FFA.2S.130.LC	○
L	77	7.9	–	7.5	7.1	FFA.2S.777.LN	–	FFA.2S.130.LC	○
L	82	8.2	–	8.0	7.6	FFA.2S.782.LN	–	FFA.2S.130.LC	○
L	87	8.7	–	8.5	8.1	FFA.2S.787.LN	–	FFA.2S.130.LC	○

Note:
1) For ordering collets separately.
3) For ordering a K type collet separately, the oversize collet and the corresponding collet nut should also be ordered.
4) These collets should be used with FLA, FFP and PCP models.
5) For models with bend relief, the FFM.●●.130.LC collet nut should be ordered (see page 110).
All dimensions are in millimeters.

● Standard, typically 0-6 weeks delivery for quantities of 250 or less.
○ Non-standard product, contact LEMO USA, typically 6-12 weeks delivery for quantities of 250 or less.
Non-standard product is defined as any product which contains one or more components which are not standard.

C, K and L type collets

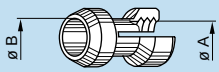

C or K type collet

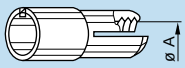

L type collet

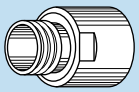

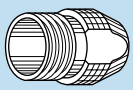

3S

Reference		Collet		Cable ø		Part number of the collet 1)	Part number of the oversize collet and of the split center-pieces 3)	Part number of the collet nut 3) 5)	Avail-ability
Type	ø	ø A	ø B	max.	min.				
C	32	3.2	–	3.0	2.5	FFA.3S.732.CN	–	FFA.3S.130.LC	○
C	42	4.2	–	4.0	3.1	FFA.3S.742.CN	–	FFA.3S.130.LC	○
C	52	5.2	–	5.0	4.1	FFA.3S.752.CN	–	FFA.3S.130.LC	○
C	62	6.2	–	6.0	5.1	FFA.3S.762.CN	–	FFA.3S.130.LC	○
C	72	7.2	–	7.0	6.1	FFA.3S.772.CN	–	FFA.3S.130.LC	○
C	82	8.2	–	8.0	7.1	FFA.3S.782.CN	–	FFA.3S.130.LC	○
C	92	9.2	8.7	9.0	8.1	FFA.3S.792.CN	–	FFA.3S.130.LC	○
C	97	9.7	8.7	9.5	9.1	FFA.3S.797.CN	–	FFA.3S.130.LC	○
C	10	10.2	8.7	10.0	9.6	FFA.3S.710.CN	–	FFA.3S.130.LC	○
C	11	10.7	9.0	10.5	10.1	FFA.3S.711.CN	–	FFA.3S.130.LC	○
K	12	12.2	–	12.0	11.1	FFA.4S.712.CN	FFA.3S.137.LCN	FFA.4S.130.LC	○
K	13	13.2	12.2	13.0	12.1	FFA.4S.713.CN	FFA.3S.137.LCN	FFA.4S.130.LC	○
C	32	3.2	–	3.0	2.5	FLA.3S.732.CN 4)	–	FFA.3S.130.LC	○
C	42	4.2	–	4.0	3.1	FLA.3S.742.CN 4)	–	FFA.3S.130.LC	○
C	52	5.2	–	5.0	4.1	FLA.3S.752.CN 4)	–	FFA.3S.130.LC	○
C	62	6.2	–	6.0	5.1	FLA.3S.762.CN 4)	–	FFA.3S.130.LC	○
C	72	7.2	–	7.0	6.1	FLA.3S.772.CN 4)	–	FFA.3S.130.LC	○
C	82	8.2	–	8.0	7.1	FLA.3S.782.CN 4)	–	FFA.3S.130.LC	○
C	92	9.2	8.7	9.0	8.1	FLA.3S.792.CN 4)	–	FFA.3S.130.LC	○
C	97	9.7	8.7	9.5	9.1	FLA.3S.797.CN 4)	–	FFA.3S.130.LC	○
C	10	10.7	8.7	10.5	9.8	FLA.3S.710.CN 4)	–	FFA.3S.130.LC	○
C	11	10.7	9.0	10.5	10.1	FLA.3S.711.CN 4)	–	FFA.3S.130.LC	○
L	42	4.2	–	4.0	3.1	FFA.3S.742.LN	–	FFA.3S.130.LC	○
L	52	5.2	–	5.0	4.1	FFA.3S.752.LN	–	FFA.3S.130.LC	○
L	62	6.2	–	6.0	5.1	FFA.3S.762.LN	–	FFA.3S.130.LC	○
L	72	7.2	–	7.0	6.1	FFA.3S.772.LN	–	FFA.3S.130.LC	○
L	82	8.2	–	8.0	7.1	FFA.3S.782.LN	–	FFA.3S.130.LC	○
L	92	9.2	–	9.0	8.1	FFA.3S.792.LN	–	FFA.3S.130.LC	○
L	97	9.7	–	9.5	9.1	FFA.3S.797.LN	–	FFA.3S.130.LC	○
L	10	10.2	–	10.0	9.6	FFA.3S.710.LN	–	FFA.3S.130.LC	○
L	11	10.7	–	10.5	10.1	FFA.3S.711.LN	–	FFA.3S.130.LC	○

Note:
1) For ordering collets separately.
3) For ordering a K type collet separately, the oversize collet and the corresponding collet nut should also be ordered.
4) These collets should be used with FLA, FFP and PCP models.
5) For models with bend relief, the FFM.●●.130.LC collet nut should be ordered (see page 110).
All dimensions are in millimeters.

● Standard, typically 0-6 weeks delivery for quantities of 250 or less.
○ Non-standard product, contact LEMO USA, typically 6-12 weeks delivery for quantities of 250 or less.
Non-standard product is defined as any product which contains one or more components which are not standard.

C, K and L type collets

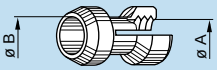

C or K type collet

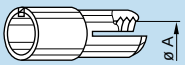

L type collet

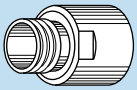

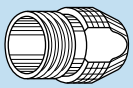

4S

Reference		Collet		Cable ø		Part number of the collet 1)	Part number of the oversize collet and of the split center-pieces 3)	Part number of the collet nut 3) 5)	Avail-ability
Type	ø	ø A	ø B	max.	min.				
C	52	5.2	–	5.0	4.1	FFA.4S.752.CN	–	FFA.4S.130.LC	○
C	62	6.2	–	6.0	5.1	FFA.4S.762.CN	–	FFA.4S.130.LC	○
C	72	7.2	–	7.0	6.1	FFA.4S.772.CN	–	FFA.4S.130.LC	○
C	82	8.2	–	8.0	7.1	FFA.4S.782.CN	–	FFA.4S.130.LC	○
C	92	9.2	–	9.0	8.1	FFA.4S.792.CN	–	FFA.4S.130.LC	○
C	10	10.2	–	10.0	9.1	FFA.4S.710.CN	–	FFA.4S.130.LC	○
C	11	11.2	–	11.0	10.1	FFA.4S.711.CN	–	FFA.4S.130.LC	○
C	12	12.2	–	12.0	11.1	FFA.4S.712.CN	–	FFA.4S.130.LC	○
C	13	13.2	12.2	13.0	12.6	FFA.4S.713.CN	–	FFA.4S.130.LC	○
K	14	14.2	–	14.0	13.1	FFA.5S.714.CN	FFA.4S.137.LCN	FFA.5S.130.LC	○
K	15	15.2	–	15.0	14.1	FFA.5S.715.CN	FFA.4S.137.LCN	FFA.5S.130.LC	○
K	16	16.2	–	16.0	15.1	FFA.5S.716.CN	FFA.4S.137.LCN	FFA.5S.130.LC	○
K	17	17.2	–	17.0	16.1	FFA.5S.717.CN	FFA.4S.137.LCN	FFA.5S.130.LC	○
K	18	18.2	–	18.0	17.1	FFA.5S.718.CN	FFA.4S.137.LCN	FFA.5S.130.LC	○
K	19	19.2	–	19.0	18.1	FFA.5S.719.CN	FFA.4S.137.LCN	FFA.5S.130.LC	○
K	20	20.2	19.7	20.0	19.1	FFA.5S.720.CN	FFA.4S.137.LCN	FFA.5S.130.LC	○
K	21	21.2	19.7	21.0	20.1	FFA.5S.721.CN	FFA.4S.137.LCN	FFA.5S.130.LC	○
K	22	22.2	19.7	22.0	21.1	FFA.5S.722.CN	FFA.4S.137.LCN	FFA.5S.130.LC	○
C	52	5.2	–	5.0	4.1	FLA.4S.752.CN 4)	–	FFA.4S.130.LC	○
C	62	6.2	–	6.0	5.1	FLA.4S.762.CN 4)	–	FFA.4S.130.LC	○
C	72	7.2	–	7.0	6.1	FLA.4S.772.CN 4)	–	FFA.4S.130.LC	○
C	82	8.2	–	8.0	7.1	FLA.4S.782.CN 4)	–	FFA.4S.130.LC	○
C	92	9.2	–	9.0	8.1	FLA.4S.792.CN 4)	–	FFA.4S.130.LC	○
C	10	10.2	–	10.0	9.1	FLA.4S.710.CN 4)	–	FFA.4S.130.LC	○
C	11	11.2	–	11.0	10.1	FLA.4S.711.CN 4)	–	FFA.4S.130.LC	○
C	12	12.2	–	12.0	11.1	FLA.4S.712.CN 4)	–	FFA.4S.130.LC	○
C	13	13.2	12.2	13.0	12.6	FLA.4S.713.CN 4)	–	FFA.4S.130.LC	○
L	52	5.2	–	5.0	4.1	FFA.4S.752.LN	–	FFA.4S.130.LC	○
L	62	6.2	–	6.0	5.1	FFA.4S.762.LN	–	FFA.4S.130.LC	○
L	72	7.2	–	7.0	6.1	FFA.4S.772.LN	–	FFA.4S.130.LC	○
L	82	8.2	–	8.0	7.1	FFA.4S.782.LN	–	FFA.4S.130.LC	○
L	92	9.2	–	9.0	8.1	FFA.4S.792.LN	–	FFA.4S.130.LC	○
L	10	10.2	–	10.0	9.1	FFA.4S.710.LN	–	FFA.4S.130.LC	○
L	11	11.2	–	11.0	10.1	FFA.4S.711.LN	–	FFA.4S.130.LC	○
L	12	12.2	–	12.0	11.1	FFA.4S.712.LN	–	FFA.4S.130.LC	○
L	13	13.2	–	13.0	12.6	FFA.4S.713.LN	–	FFA.4S.130.LC	○

Note:
1) For ordering collets separately.
3) For ordering a K type collet separately, the oversize collet and the corresponding collet nut should also be ordered.
4) These collets should be used with FLA, FFP and PCP models.
5) For models with bend relief, the FFM.●●.130.LC collet nut should be ordered (see page 110).
All dimensions are in millimeters.

These notes also apply to the following page.

● Standard, typically 0-6 weeks delivery for quantities of 250 or less.
○ Non-standard product, contact LEMO USA, typically 6-12 weeks delivery for quantities of 250 or less.
Non-standard product is defined as any product which contains one or more components which are not standard.

C, K and L type collets

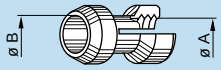

C or K type collet

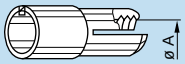

L type collet

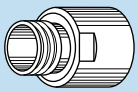

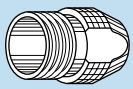

5S

Reference		Collet		Cable ø		Part number of the collet 1)	Part number of the oversize collet and of the split center-pieces 3)	Part number of the collet nut 3)	Avail-ability
Type	ø	ø A	ø B	max.	min.				
C	72	7.2	–	7.0	6.1	FFA.5S.772.CN	–	FFA.5S.130.LC	○
C	82	8.2	–	8.0	7.1	FFA.5S.782.CN	–	FFA.5S.130.LC	○
C	92	9.2	–	9.0	8.1	FFA.5S.792.CN	–	FFA.5S.130.LC	○
C	10	10.2	–	10.0	9.1	FFA.5S.710.CN	–	FFA.5S.130.LC	○
C	11	11.2	–	11.0	10.1	FFA.5S.711.CN	–	FFA.5S.130.LC	○
C	12	12.2	–	12.0	11.1	FFA.5S.712.CN	–	FFA.5S.130.LC	○
C	13	13.2	–	13.0	12.1	FFA.5S.713.CN	–	FFA.5S.130.LC	○
C	14	14.2	–	14.0	13.1	FFA.5S.714.CN	–	FFA.5S.130.LC	○
C	15	15.2	–	15.0	14.1	FFA.5S.715.CN	–	FFA.5S.130.LC	○
C	16	16.2	–	16.0	15.1	FFA.5S.716.CN	–	FFA.5S.130.LC	○
C	17	17.2	–	17.0	16.1	FFA.5S.717.CN	–	FFA.5S.130.LC	○
C	18	18.2	–	18.0	17.1	FFA.5S.718.CN	–	FFA.5S.130.LC	○
C	19	19.2	–	19.0	18.1	FFA.5S.719.CN	–	FFA.5S.130.LC	○
C	20	20.2	19.7	20.0	19.1	FFA.5S.720.CN	–	FFA.5S.130.LC	○
C	21	21.2	19.7	21.0	20.1	FFA.5S.721.CN	–	FFA.5S.130.LC	○
C	22	22.2	19.7	22.0	21.1	FFA.5S.722.CN	–	FFA.5S.130.LC	○
K	23	23.2	–	23.0	22.1	FFA.6S.723.CN	FFA.5S.137.LCN	FFA.6S.130.LC	○
K	24	24.2	–	24.0	23.1	FFA.6S.724.CN	FFA.5S.137.LCN	FFA.6S.130.LC	○
K	25	25.2	–	25.0	24.1	FFA.6S.725.CN	FFA.5S.137.LCN	FFA.6S.130.LC	○
K	26	26.2	–	26.0	25.1	FFA.6S.726.CN	FFA.5S.137.LCN	FFA.6S.130.LC	○
K	27	27.2	–	27.0	26.1	FFA.6S.727.CN	FFA.5S.137.LCN	FFA.6S.130.LC	○
K	28	28.2	27.2	28.0	27.1	FFA.6S.728.CN	FFA.5S.137.LCN	FFA.6S.130.LC	○
K	29	29.2	27.2	29.0	28.1	FFA.6S.729.CN	FFA.5S.137.LCN	FFA.6S.130.LC	○
K	30	30.2	27.2	30.0	29.1	FFA.6S.730.CN	FFA.5S.137.LCN	FFA.6S.130.LC	○
C	72	7.2	–	7.0	6.1	FLA.5S.772.CN 2)	–	FFA.5S.130.LC	○
C	82	8.2	–	8.0	7.1	FLA.5S.782.CN 2)	–	FFA.5S.130.LC	○
C	92	9.2	–	9.0	8.1	FLA.5S.792.CN 2)	–	FFA.5S.130.LC	○
C	10	10.2	–	10.0	9.1	FLA.5S.710.CN 2)	–	FFA.5S.130.LC	○
C	11	11.2	–	11.0	10.1	FLA.5S.711.CN 2)	–	FFA.5S.130.LC	○
C	12	12.2	–	12.0	11.1	FLA.5S.712.CN 2)	–	FFA.5S.130.LC	○
C	13	13.2	–	13.0	12.1	FLA.5S.713.CN 2)	–	FFA.5S.130.LC	○
C	14	14.2	–	14.0	13.1	FLA.5S.714.CN 2)	–	FFA.5S.130.LC	○
C	15	15.2	–	15.0	14.1	FLA.5S.715.CN 2)	–	FFA.5S.130.LC	○
C	16	16.2	–	16.0	15.1	FLA.5S.716.CN 2)	–	FFA.5S.130.LC	○
C	17	17.2	–	17.0	16.1	FLA.5S.717.CN 2)	–	FFA.5S.130.LC	○
C	18	18.2	–	18.0	17.1	FLA.5S.718.CN 2)	–	FFA.5S.130.LC	○
C	19	19.2	–	19.0	18.1	FLA.5S.719.CN 2)	–	FFA.5S.130.LC	○
C	20	20.2	19.7	20.0	19.1	FLA.5S.720.CN 2)	–	FFA.5S.130.LC	○
C	21	21.2	19.7	21.0	20.1	FLA.5S.721.CN 2)	–	FFA.5S.130.LC	○
C	22	22.2	19.7	22.0	21.1	FLA.5S.722.CN 2)	–	FFA.5S.130.LC	○
L	92	9.2	–	9.0	8.1	FFA.5S.792.LN	–	FFA.5S.130.LC	○
L	10	10.2	–	10.0	9.1	FFA.5S.710.LN	–	FFA.5S.130.LC	○
L	11	11.2	–	11.0	10.1	FFA.5S.711.LN	–	FFA.5S.130.LC	○
L	12	12.2	–	12.0	11.1	FFA.5S.712.LN	–	FFA.5S.130.LC	○
L	13	13.2	–	13.0	12.1	FFA.5S.713.LN	–	FFA.5S.130.LC	○
L	14	14.2	–	14.0	13.1	FFA.5S.714.LN	–	FFA.5S.130.LC	○
L	15	15.2	–	15.0	14.1	FFA.5S.715.LN	–	FFA.5S.130.LC	○
L	16	16.2	–	16.0	15.1	FFA.5S.716.LN	–	FFA.5S.130.LC	○
L	17	17.2	–	17.0	16.1	FFA.5S.717.LN	–	FFA.5S.130.LC	○
L	18	18.2	–	18.0	17.1	FFA.5S.718.LN	–	FFA.5S.130.LC	○
L	19	19.2	–	19.0	18.1	FFA.5S.719.LN	–	FFA.5S.130.LC	○
L	20	20.2	–	20.0	19.1	FFA.5S.720.LN	–	FFA.5S.130.LC	○
L	21	21.2	–	21.0	20.1	FFA.5S.721.LN	–	FFA.5S.130.LC	○

Note: The L type collet is the only possible for the 5S.112 type.

● Standard, typically 0-6 weeks delivery for quantities of 250 or less.
○ Non-standard product, contact LEMO USA, typically 6-12 weeks delivery for quantities of 250 or less.
Non-standard product is defined as any product which contains one or more components which are not standard.

C and L type collets

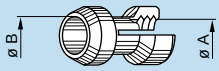

C type collet

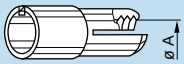

L type collet

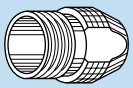

6S

Reference		Collet		Cable ø		Part number of the collet [1]	Part number of the oversize collet and of the split center-pieces	Part number of the collet nut	Avail-ability
Type	ø	ø A	ø B	max.	min.				
C	12	12.2	–	12.0	11.1	FFA.6S.712.CN	–	FFA.6S.130.LC	○
C	13	13.2	–	13.0	12.1	FFA.6S.713.CN	–	FFA.6S.130.LC	○
C	14	14.2	–	14.0	13.1	FFA.6S.714.CN	–	FFA.6S.130.LC	○
C	15	15.2	–	15.0	14.1	FFA.6S.715.CN	–	FFA.6S.130.LC	○
C	16	16.2	–	16.0	15.1	FFA.6S.716.CN	–	FFA.6S.130.LC	○
C	17	17.2	–	17.0	16.1	FFA.6S.717.CN	–	FFA.6S.130.LC	○
C	18	18.2	–	18.0	17.1	FFA.6S.718.CN	–	FFA.6S.130.LC	○
C	19	19.2	–	19.0	18.1	FFA.6S.719.CN	–	FFA.6S.130.LC	○
C	20	20.2	–	20.0	19.1	FFA.6S.720.CN	–	FFA.6S.130.LC	○
C	21	21.2	–	21.0	20.1	FFA.6S.721.CN	–	FFA.6S.130.LC	○
C	22	22.2	–	22.0	21.1	FFA.6S.722.CN	–	FFA.6S.130.LC	○
C	23	23.2	–	23.0	22.1	FFA.6S.723.CN	–	FFA.6S.130.LC	○
C	24	24.2	–	24.0	23.1	FFA.6S.724.CN	–	FFA.6S.130.LC	○
C	25	25.2	–	25.0	24.1	FFA.6S.725.CN	–	FFA.6S.130.LC	○
C	26	26.2	–	26.0	25.1	FFA.6S.726.CN	–	FFA.6S.130.LC	○
C	27	27.2	–	27.0	26.1	FFA.6S.727.CN	–	FFA.6S.130.LC	○
C	28	28.2	27.2	28.0	27.1	FFA.6S.728.CN	–	FFA.6S.130.LC	○
C	29	29.2	27.2	29.0	28.1	FFA.6S.729.CN	–	FFA.6S.130.LC	○
C	30	30.2	27.2	30.0	29.1	FFA.6S.730.CN	–	FFA.6S.130.LC	○
L	13	12.2	–	12.0	11.1	FFA.6S.712.LN	–	FFA.6S.130.LC	○
L	14	13.2	–	13.0	12.1	FFA.6S.713.LN	–	FFA.6S.130.LC	○
L	15	14.2	–	14.0	13.1	FFA.6S.714.LN	–	FFA.6S.130.LC	○
L	16	15.2	–	15.0	14.1	FFA.6S.715.LN	–	FFA.6S.130.LC	○
L	17	16.2	–	16.0	15.1	FFA.6S.716.LN	–	FFA.6S.130.LC	○
L	18	17.2	–	17.0	16.1	FFA.6S.717.LN	–	FFA.6S.130.LC	○
L	19	18.2	–	18.0	17.1	FFA.6S.718.LN	–	FFA.6S.130.LC	○
L	20	19.2	–	19.0	18.1	FFA.6S.719.LN	–	FFA.6S.130.LC	○
L	21	20.2	–	20.0	19.1	FFA.6S.720.LN	–	FFA.6S.130.LC	○
L	22	21.2	–	21.0	20.1	FFA.6S.721.LN	–	FFA.6S.130.LC	○
L	23	22.2	–	22.0	21.1	FFA.6S.722.LN	–	FFA.6S.130.LC	○
L	24	23.2	–	23.0	22.1	FFA.6S.723.LN	–	FFA.6S.130.LC	○
L	25	24.2	–	24.0	23.1	FFA.6S.724.LN	–	FFA.6S.130.LC	○
L	26	25.2	–	25.0	24.1	FFA.6S.725.LN	–	FFA.6S.130.LC	○
L	27	26.2	–	26.0	25.1	FFA.6S.726.LN	–	FFA.6S.130.LC	○
L	28	27.2	–	27.0	26.1	FFA.6S.727.LN	–	FFA.6S.130.LC	○
L	29	28.2	–	28.0	27.1	FFA.6S.728.LN	–	FFA.6S.130.LC	○
L	30	29.2	–	29.0	28.1	FFA.6S.729.LN	–	FFA.6S.130.LC	○
L	31	30.2	–	30.0	29.1	FFA.6S.730.LN	–	FFA.6S.130.LC	○

Note:
[1] For ordering collets separately.
All dimensions are in millimeters.

● Standard, typically 0-6 weeks delivery for quantities of 250 or less.
○ Non-standard product, contact LEMO USA, typically 6-12 weeks delivery for quantities of 250 or less.
Non-standard product is defined as any product which contains one or more components which are not standard.

Bend relief nut and bend relief

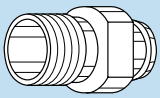

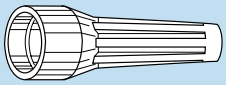

	Reference		Part number of the collet nut	Bend relief to be used [1]
	Type	ø		
00	C	15 to 31	FFM.00.130.LC	GMA.00.0●●.D●
	C	16 to 31	FFM.00.130.LC	GMA.00.0●●.D●
	K	37 to 42	FFM.0S.130.LC	GMA.0B.0●●.D●
	L	17 to 31	FFM.00.130.LC	GMA.00.0●●.D●
0S	C	27 to 42	FFM.0S.130.LC	GMA.0B.0●●.D●
	K	47 to 62	FFM.1S.130.LC	GMA.1B.0●●.D●
	L	27 to 42	FFM.0S.130.LC	GMA.0B.0●●.D●
1S	C	27 to 62	FFM.1S.130.LC	GMA.1B.0●●.D●
	K	72 to 82	FFM.2S.130.LC	GMA.2B.0●●.D●
	L	27 to 62	FFM.1S.130.LC	GMA.1B.0●●.D●
2S	C	42 to 82	FFM.2S.130.LC	GMA.2B.0●●.D●
	K	92 to 10	FFM.3S.130.LC	GMA.3B.0●●.D●
	L	42 to 82	FFM.2S.130.LC	GMA.2B.0●●.D●
3S	C	52 to 10	FFM.3S.130.LC	GMA.3B.0●●.D●
	K	12 to 13	FFM.4S.130.LC	GMA.4B.0●●.D●
	L	52 to 10	FFM.3S.130.LC	GMA.3B.0●●.D●
4S	C	82 to 13	FFM.4S.130.LC	GMA.4B.0●●.D●
	L	82 to 13	FFM.4S.130.LC	GMA.4B.0●●.D●

Note: [1] The bend relief is to be ordered separately (see pages 137).

•Variant

Anodized color

The «variant» position of the reference is used to specify the anodized color according to the table below.

Part number for connector with standard collet nut

Ref.	Anodized color
A	blue
J	yellow
N	black

Ref.	Anodized color
R	red
T	natural
V	green

Part number for connector with bend relief backnut

Ref.	Anodized color
L	black
X	natural

Note: Other anodizing colors are available for connectors with bend relief backnut. Please consult us.

● Standard, typically 0-6 weeks delivery for quantities of 250 or less.
○ Non-standard product, contact LEMO USA, typically 6-12 weeks delivery for quantities of 250 or less.
Non-standard product is defined as any product which contains one or more components which are not standard.

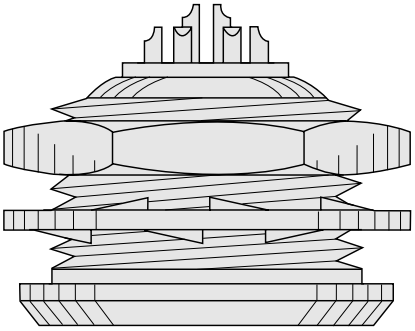

2C Series Connectors

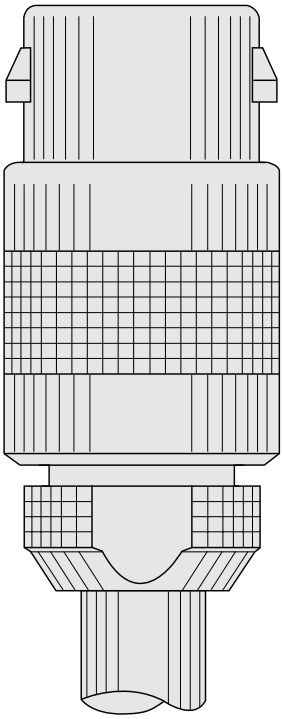

2C Series Connectors

In many applications, it is necessary to use multicontact connectors which have shortened dimensions but require high contact density. LEMO short series connectors, which are shorter than 30 mm, perfectly meet these needs.

The 2C series, featuring a hermaphroditic insert, is available in multicontact type up to 14 contacts.

Interconnections

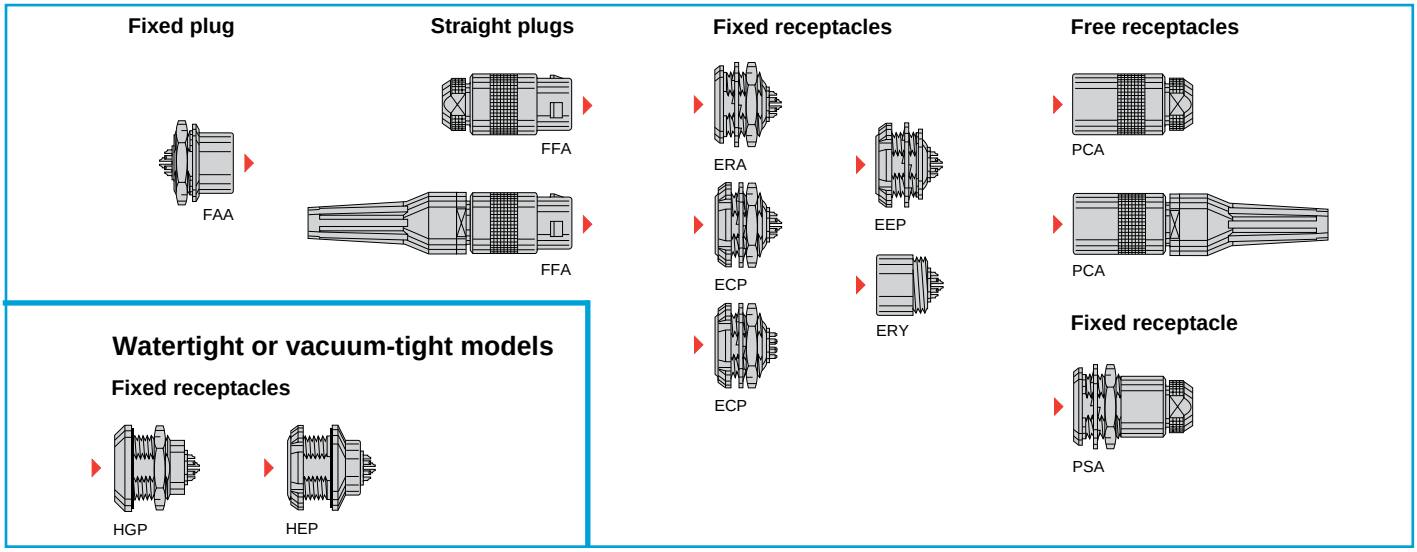

Model Description

ECP Fixed receptacle with two nuts (back panel mounting)
ECP Fixed receptacle with two nuts, straight contact for printed circuit (back panel mounting)
EEP Fixed receptacle, nut fixing (back panel mounting)
ERA Fixed receptacle, nut fixing
ERY Fixed receptacle, protruding shell (screw fixing on the panel)
FAA Fixed plug, nut fixing, non-latching
FFA Straight plug, cable collet
FFA Straight plug, cable collet and nut for fitting a bend relief
HEP Fixed receptacle, nut fixing, watertight or vacuum-tight (back panel mounting)
HGP Fixed receptacle, nut fixing, watertight or vacuum-tight
PCA Free receptacle, cable collet
PCA Free receptacle, cable collet and nut for fitting a bend relief
PSA Fixed receptacle nut fixing, cable collet

Part Section Showing Internal Components

Fixed receptacle

1. outer shell
2. hexagonal nut
3. locking washer
4. insulator
5. male contact
6. female contact

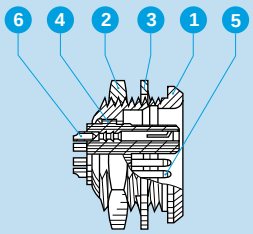

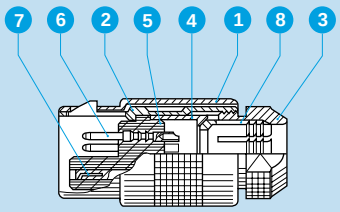

Straight plug

1. outer shell
2. latch sleeve
3. collet nut
4. split center-piece
5. insulator
6. male contact
7. female contact
8. collet

Technical Characteristics

Mechanical and Climatic

Characteristics	Value	Standard
Endurance	> 500 cycles	IEC 60512-5 test 9a
Humidity	up to 95% at 140° F	
Temperature range[1)]	-67° F +482° F	
Salt spray corrosion test	> 144 h	IEC 60512-6 test 11f
Protection index	IP50	IEC 60529
Climatic category	55/175/21	IEC 60068-1

Note:
Various tests have been carried out with FFA and ERA connector pairs, with chrome-plated brass shell and PEEK insulator. Detailed electrical characteristics, as well as materials and treatment are presented in the chapter Technical Characteristics on page 5.
[1)] For watertight or vacuum-tight models: -4° F, +176° F

Data Subject to Change

Part Number Example

Straight plug with cable collet

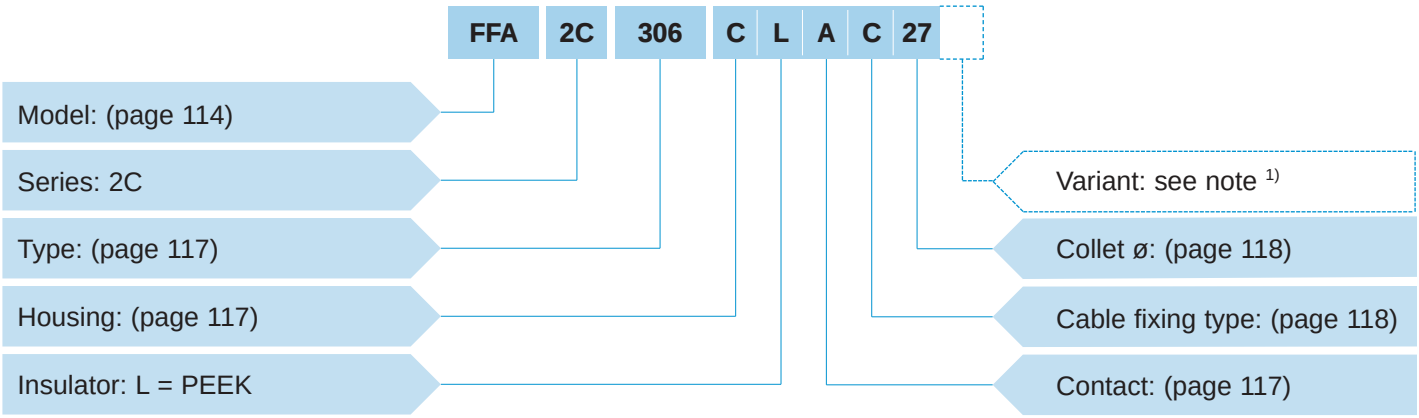

FFA.2C.306.CLAC27 = straight plug with cable collet, 2C series, multicontact type with six contacts, outer shell in chrome-plated brass, PEEK insulator, male solder contacts, C type collet for 2.7 mm diameter cable.

Fixed receptacle

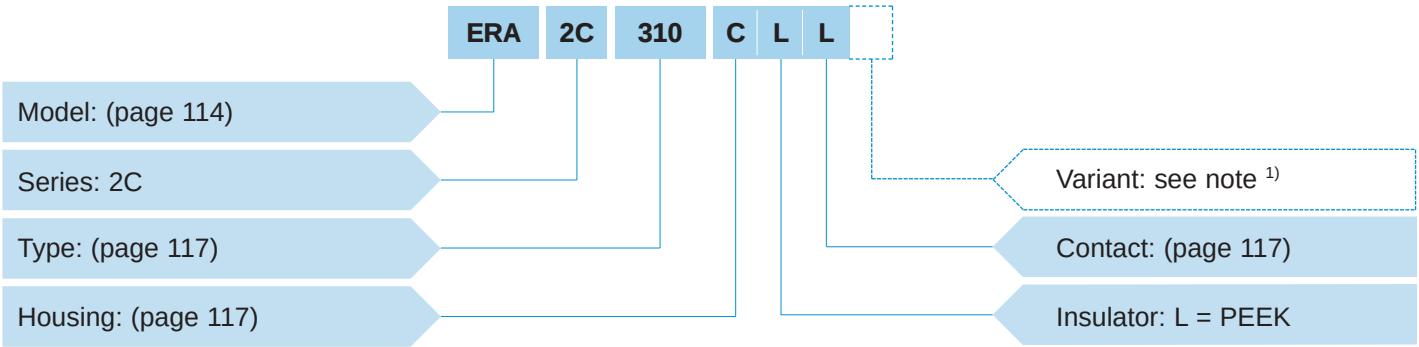

ERA.2C.310.CLL = fixed receptacle, nut fixing, 2C series, multicontact type with 10 contacts, outer shell in chrome-plated brass, PEEK insulator, female solder contacts.

Free receptacle

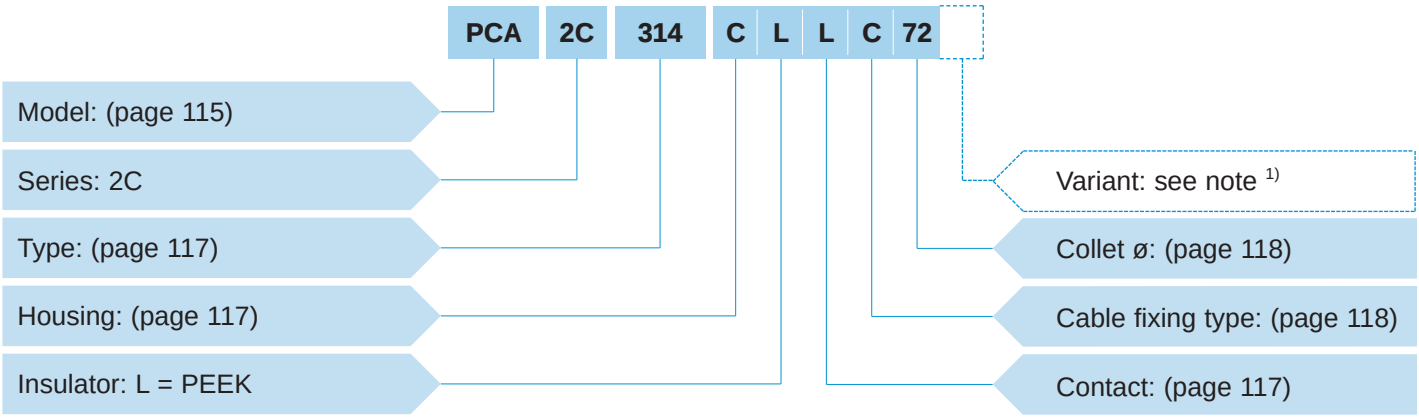

PCA.2C.314.CLLC72 = straight receptacle with cable collet, 2C series, multicontact type with 14 contacts, outer shell in chrome-plated brass, PEEK insulator, female contacts solder, C type collet for 7.2 mm diameter cable.

Note: 1) The «Variant» position in the reference is used to specify either the presence of a collet nut for fitting the bend relief or the anodized color of the housing in aluminium alloy. See page 118.
For models with collet nut for fitting the bend relief, a «Z» should be indicated and a bend relief can be ordered separately as indicated in the «Accessories» section. An order for a connector with bend relief should thus include two part numbers.
For the various housings available in colors, the corresponding letter in the part number for the color is indicated on page 118.
For the watertight models of receptacle, the letter «P» is used; for the vacuum-tight models of receptacle the letters «PV» shall be indicated.

Models

FFA.2C Straight plug, cable collet

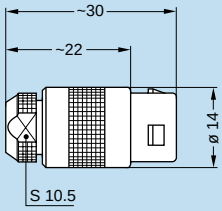

Availabiltiy: ○

FFA.2C Straight plug, cable collet and nut for fitting a bend relief

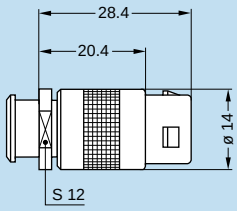

Availabiltiy: ○

Note: The bend relief must be ordered separately (see page 137).

FAA.2C Fixed plug, nut fixing, non-latching

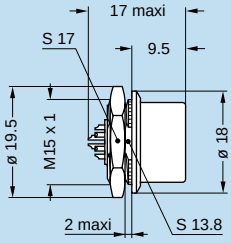

Availabiltiy: ○

Panel cut-out (page 119)

ERA.2C Fixed receptacle, nut fixing

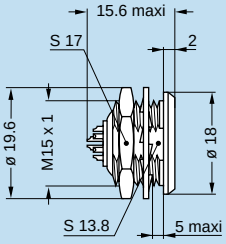

Availabiltiy: ○

Panel cut-out (page 119)

ECP.2C Fixed receptacle with two nuts (back panel mounting)

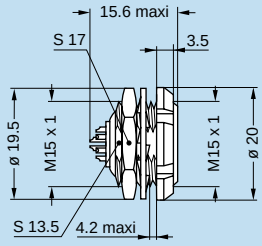

Availabiltiy: ○

Panel cut-out (page 119)

Note: All dimensions are in millimeters.

ECP.2C Fixed receptacle with two nuts, straight contact for printed circuit (back panel mounting)

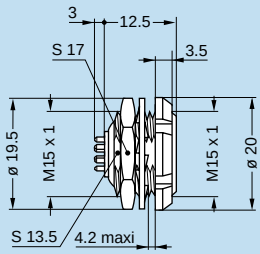

Availabiltiy: ○

Panel cut-out (page 115)

PCB drilling pattern (page 119)

● Standard, typically 0-6 weeks delivery for quantities of 250 or less.
○ Non-standard product, contact LEMO USA, typically 6-12 weeks delivery for quantities of 250 or less.
Non-standard product is defined as any product which contains one or more components which are not standard.

EEP.2C Fixed receptacle, nut fixing (back panel mounting)

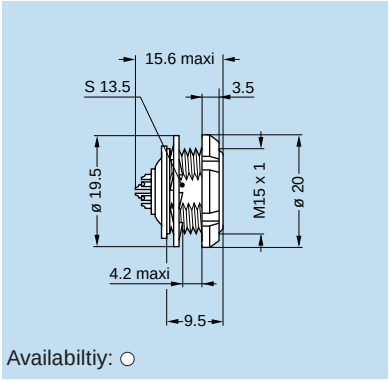

Panel cut-out (page 119)

ERY.2C Fixed receptacle, protruding shell, (screw fixing on the panel)

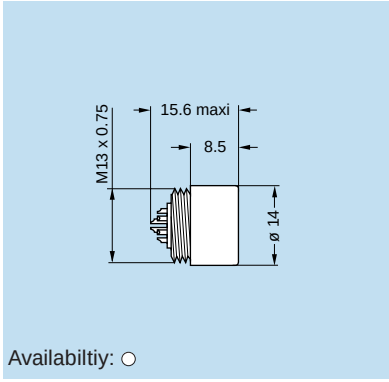

Panel cut-out (page 119)

PCA.2C Free receptacle, cable collet

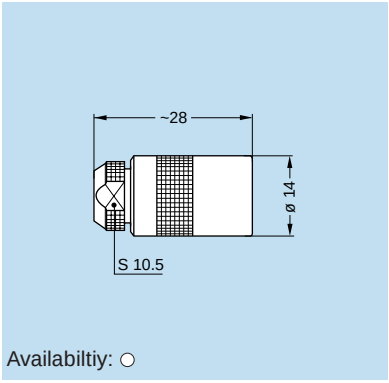

PCA.2C Free receptacle, cable collet and nut for fitting a bend relief

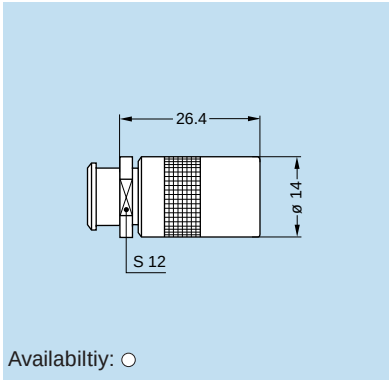

Note: The bend relief must be ordered separately (see page 137).

PSA.2C Fixed receptacle nut fixing, cable collet

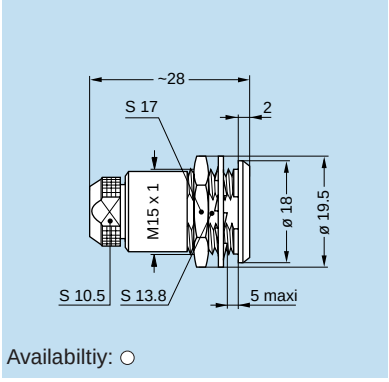

Panel cut-out (page 119)

Note: All dimensions are in millimeters.

● Standard, typically 0-6 weeks delivery for quantities of 250 or less.
○ Non-standard product, contact LEMO USA, typically 6-12 weeks delivery for quantities of 250 or less.
Non-standard product is defined as any product which contains one or more components which are not standard.

Watertight or vacuum-tight models

HGP and HEP receptacles allow the device on which they are fitted to reach a protection index of IP68 as per IEC 60529. They are fully compatible with plugs of the same series and are widely used for portable radios, military, laboratory equipment, aviation, etc. These models are identified by a letter «P» at the end of the reference. These models are also available in a vacuum-tight version. Such models are identified by an additional letter «V» at the end of the part number (certificate on request).

Epoxy resin is used to seal these models.

Part number example:
Watertight receptacle – HGP.2C.304.CLLP
Vacuum-tight receptacle – HGP.2C.304.CLLPV

Technical Characteristics

Mechanical and Climatic

Characteristics	Value	Standard
Endurance	> 500 cycles	IEC 60512-5 test 9a
Humidity	up to 95% at 140° F	
Temperature range	-4° F, +176° F	
Salt spray corrosion test	> 144h	IEC 60512-6 test 11f
Protection index (mated)	IP 68	IEC 60529
Climatic category	20/80/21	IEC 60068-1
Leakage rate (He)[1)]	$< 10^{-7}$ mbar.l.s^{-1}	IEC 60512-7 test 14b
Maximum operating pressure	5 bars	IEC 60512-7 test 14d

Note: [1)] only for vacuum-tight models.

HGP.2C Fixed receptacle, nut fixing, watertight or vacuum-tight

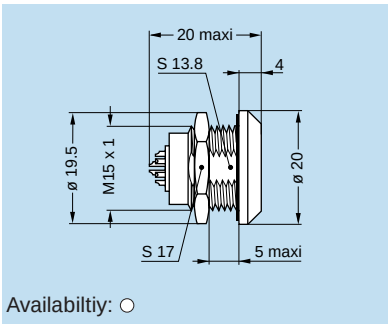

Panel cut-out (page 119)

HEP.2C Fixed receptacle, nut fixing, watertight or vacuum-tight (back panel mounting)

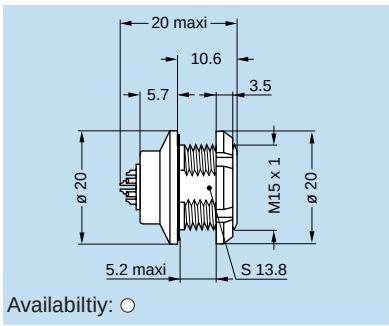

Panel cut-out (page 119)

● Standard, typically 0-6 weeks delivery for quantities of 250 or less.
○ Non-standard product, contact LEMO USA, typically 6-12 weeks delivery for quantities of 250 or less.
Non-standard product is defined as any product which contains one or more components which are not standard.

Type

Multicontact

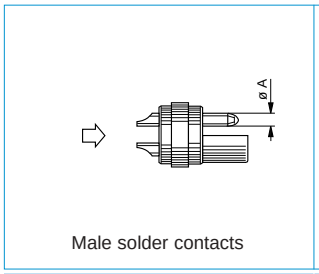

Male solder contacts

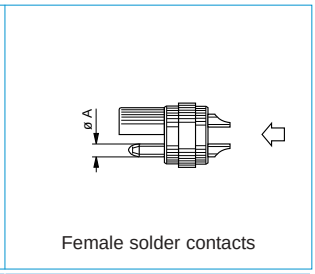

Female solder contacts

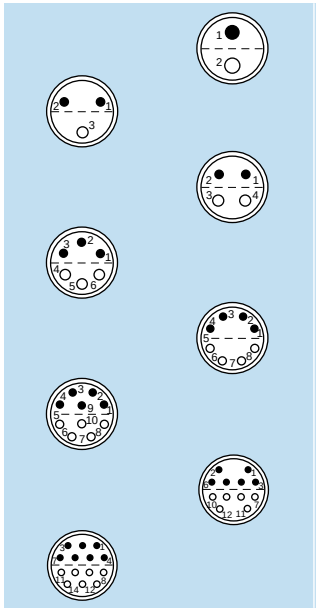

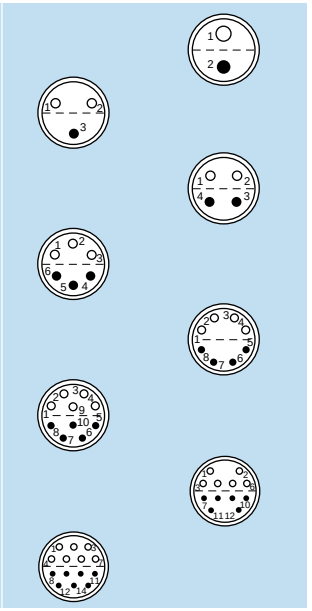

Reference	Number of contacts	ø A (mm)	Contact Type Availability		Test voltage (kV rms)[1) 2)]	Test voltage (kV dc)[1) 2)]	Rated current (A)[1)]
			Solder	Printed circuit			
302	2	1.6	○	–	1.80	2.40	20
303	3	1.3	○	–	1.50	2.10	15
304	4	1.3	○	–	1.80	2.40	15
306	6	1.3	○	–	1.50	2.10	12
308	8	0.7	○	○	0.95	1.35	7
310	10	0.7	○	○	0.95	1.35	7
312	12	0.7	○	○	0.60	0.90	5
314	14	0.7	○	○	0.60	0.90	5

Note: 1) **See calculation method, caution and suggested standard on page 11**
2) Lowest measured value; contact to contact or contact to shell.

Housings

Ref.	Material	Surface treatment		Note
		Outer shell and collet nut	Latch sleeve and grounding crown	
C	Brass	chrome	nickel	■
N	Brass	nickel	nickel	□
K	Brass	black chrome	nickel	■
L	Aluminium alloy1)	anodized	nickel-plated	□

Note:
1) The «Variant» position of the reference is used to specify the anodized color.

■ First choice alternative □ Special order alternative

Contacts

Ref.	Contact type
A	Male solder
L	Female solder
N	Female printed circuit

Multicontact connectors are fitted with hermaphroditic inserts including male and female contacts. However, by convention, the letter indicating the contact type in the part number composition will be the male contact (reference A) for plugs and female contact (reference L) for receptacles.

● Standard, typically 0-6 weeks delivery for quantities of 250 or less.
○ Non-standard product, contact LEMO USA, typically 6-12 weeks delivery for quantities of 250 or less.
Non-standard product is defined as any product which contains one or more components which are not standard.

Collets

Short collet

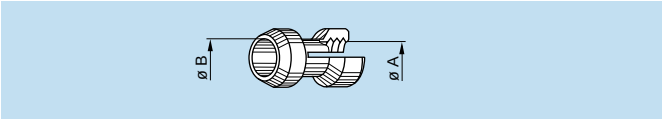

Reference		Collet ø		Cable ø		Part number of the collet 1)	Avail-ability
Type	ø	ø A	ø B	max.	min.		
C	27	2.7	–	2.6	2.2	FFA.2C.727.CN	○
C	32	3.2	–	3.1	2.7	FFA.2C.732.CN	○
C	37	3.7	–	3.6	3.2	FFA.2C.737.CN	○
C	42	4.2	–	4.1	3.7	FFA.2C.742.CN	○
C	47	4.7	–	4.6	4.2	FFA.2C.747.CN	○
C	52	5.2	–	5.1	4.7	FFA.2C.752.CN	○
C	57	5.7	–	5.6	5.2	FFA.2C.757.CN	○
C	62	6.2	–	6.1	5.7	FFA.2C.762.CN	○
C	67	6.7	6.2	6.6	6.2	FFA.2C.767.CN	○
C	72	7.2	6.2	7.1	6.7	FFA.2C.772.CN	○
C	75	7.5	6.2	7.4	7.2	FFA.2C.775.CN	○
C	80	8.0	6.2	7.9	7.5	FFA.2C.780.CN	○

Long collet

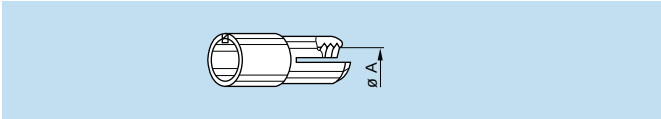

Reference		Collet ø		Cable ø		Part number of the collet 1)	Avail-ability
Type	ø	ø A	ø B	max.	min.		
L	14	1.4	–	1.3	0.8	FFA.2C.714.LN	○
L	27	2.7	–	2.6	2.2	FFA.2C.727.LN	○
L	32	3.2	–	3.1	2.7	FFA.2C.732.LN	○
L	37	3.7	–	3.6	3.2	FFA.2C.737.LN	○
L	42	4.2	–	4.1	3.7	FFA.2C.742.LN	○
L	47	4.7	–	4.6	4.2	FFA.2C.747.LN	○
L	52	5.2	–	5.1	4.7	FFA.2C.752.LN	○
L	57	5.7	–	5.6	5.2	FFA.2C.757.LN	○
L	62	6.2	–	6.1	5.7	FFA.2C.762.LN	○
L	67	6.7	–	6.6	6.2	FFA.2C.767.LN	○
L	72	7.2	–	7.1	6.7	FFA.2C.772.LN	○
L	77	7.7	–	7.6	7.2	FFA.2C.777.LN	○
L	82	8.2	–	8.1	7.7	FFA.2C.782.LN	○

Note: 1) For ordering collets separately.
All dimensions are in millimeters.

Variant

Anodized color for Aluminum housing

The «variant» position of the reference is used to specify the anodized color according to the table below.

Part number for connector with standard collet nut:

Ref.	Anodized color
A	blue
J	yellow
N	black

Ref.	Anodized color
R	red
T	natural
V	green

Part number for connector with bend relief backnut:

Ref.	Anodized color
L	black
X	natural

Note: Other anodizing colors are available for connectors with bend relief collet nut. Please consult us.

Accessories

Accessories for the 2C series are identical with the 2G series. Please refer to corresponding pages (page 128,129).

Tooling

Please consult the «Tooling» section (page 144).

● Standard, typically 0-6 weeks delivery for quantities of 250 or less.
○ Non-standard product, contact LEMO USA, typically 6-12 weeks delivery for quantities of 250 or less.
Non-standard product is defined as any product which contains one or more components which are not standard.

Panel Cut-Outs

Panel cut-outs

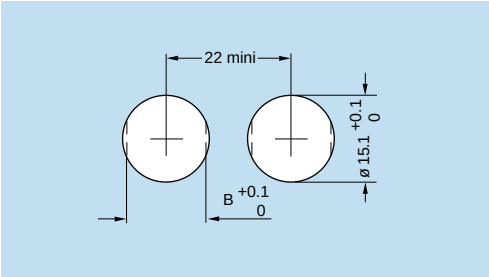

Model	B (mm)
ECP	13.6
EEP	13.6
ERA	13.9
FAA	13.9
HEP	13.9
HGP	13.9
PSA	13.9

ERY

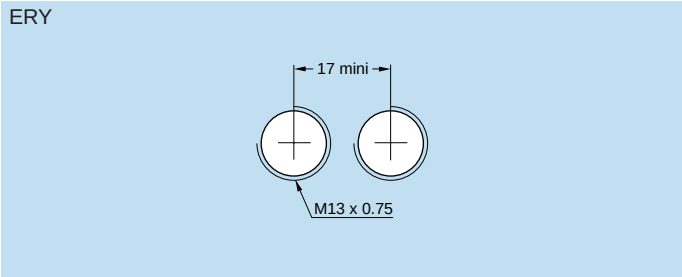

Note: Mounting nut torque: 6 Nm (1N = 0.102 kg)

PCB drilling patterns

308

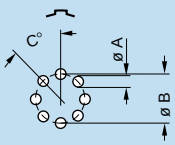

310

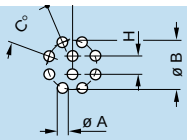

312

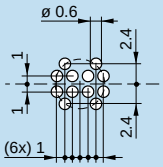

314

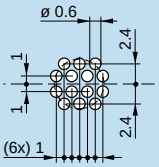

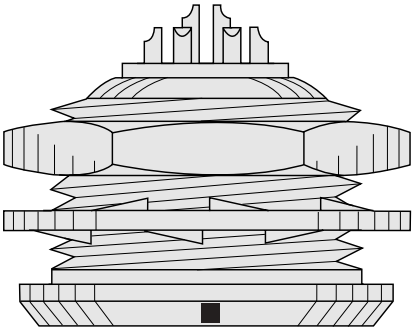

2G Series Connectors

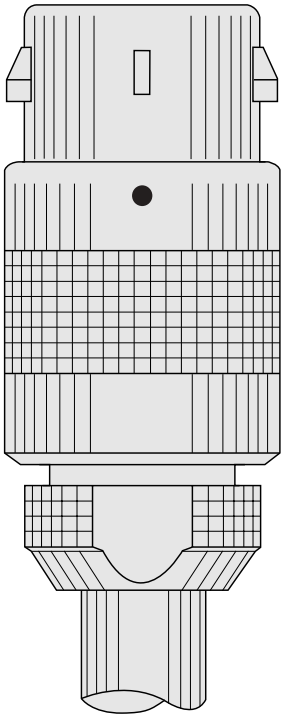

2G Series Connectors

The 2G series with key (G) provides the same advantages of space saving due to its small dimensions as the 2C series and is available in multicontact type with 18 contacts.

Interconnections

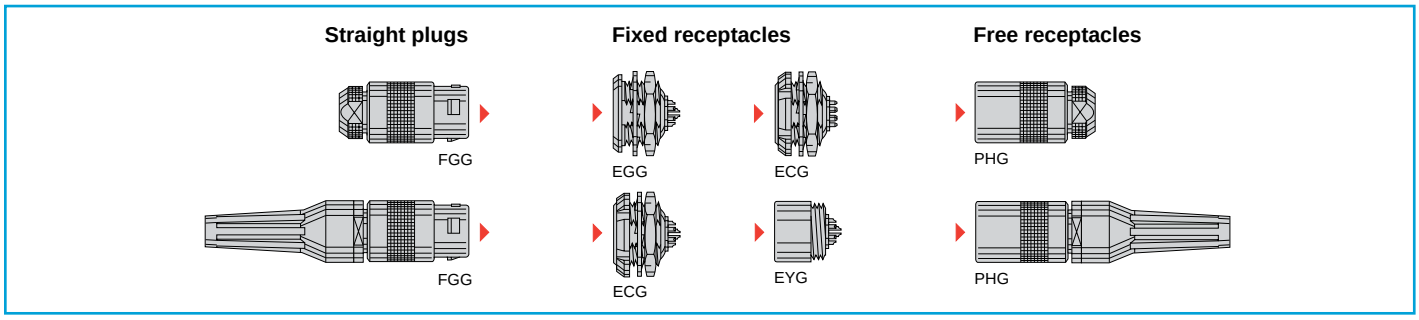

Model Description

ECG Fixed receptacle with two nuts, key (G) (back panel mounting)
ECG Fixed receptacle with two nuts, key (G), straight contact for printed circuit (back panel mounting)
EGG Fixed receptacle, nut fixing, key (G)
EYG Fixed receptacle, key (G), protruding shell (screw fixing on the panel)
FGG Straight plug, key (G), cable collet
FGG Straight plug, key (G), cable collet and nut for fitting a bend relief
PHG Free receptacle, key (G), cable collet
PHG Free receptacle, key (G), cable collet and nut for fitting a bend relief

Part Section Showing Internal Components

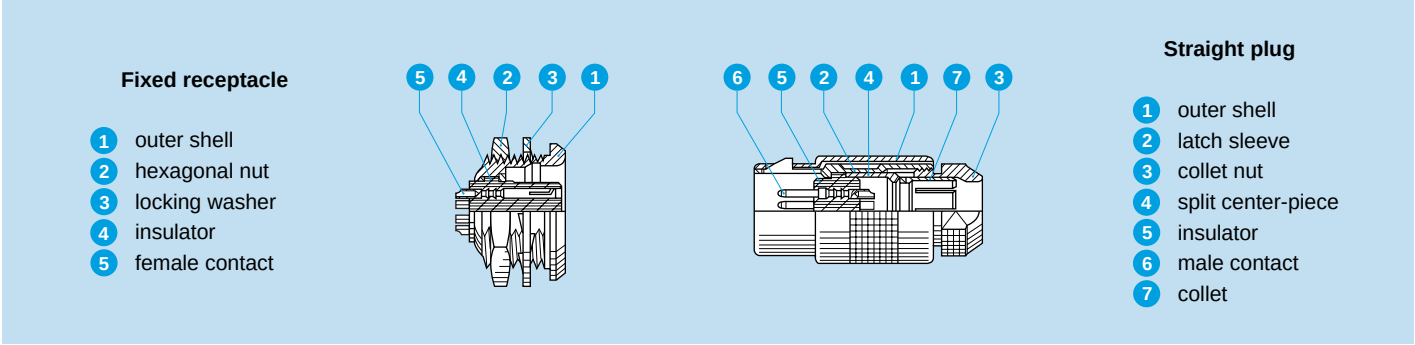

Technical Characteristics

Mechanical and Climatic

Characterisitcs	Value	Standard
Endurance	> 500 cycles	IEC 60512-5 test 9a
Humidity	up to 95% at 140° F	
Temperature range	-67° F +482° F	
Salt spray corrosion test	> 144 h	IEC 60512-6 test 11f
Protection index	IP50	IEC 60529
Climatic category	55/175/21	IEC 60068-1

Note:
The various tests have been carried out with FGG and EGG connector pairs, with chrome-plated brass shell and PEEK insulator.
Detailed electrical characteristics, as well as materials and treatment are presented on page 5.

Part Number Example

Straight plug with cable collet

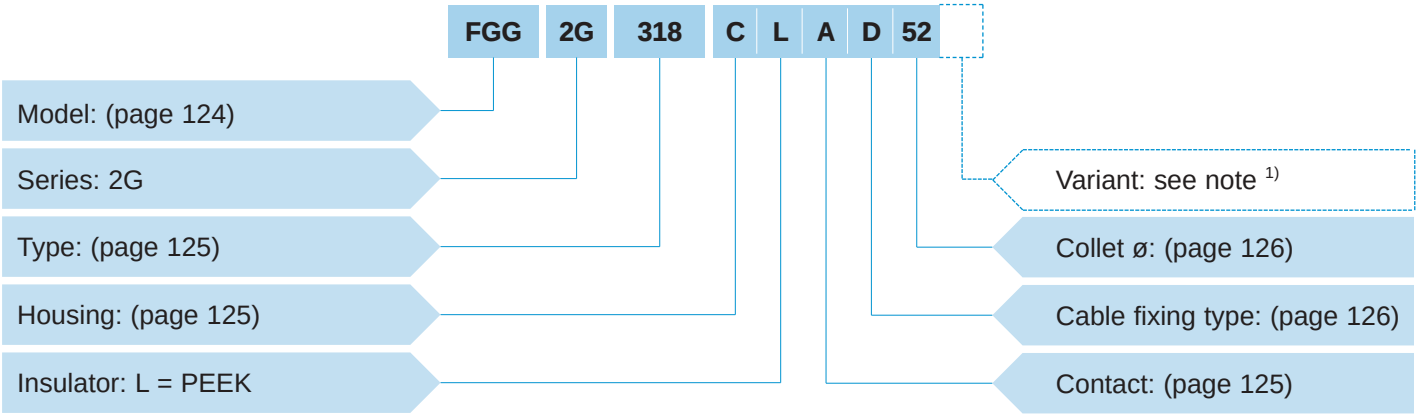

FGG.2G.318.CLAD52 = straight plug with cable collet, 2G series, multicontact type with 18 contacts, outer shell in chrome-plated brass, PEEK insulator, male solder contacts, D type collet for 5.2 mm diameter cable.

Fixed receptacle

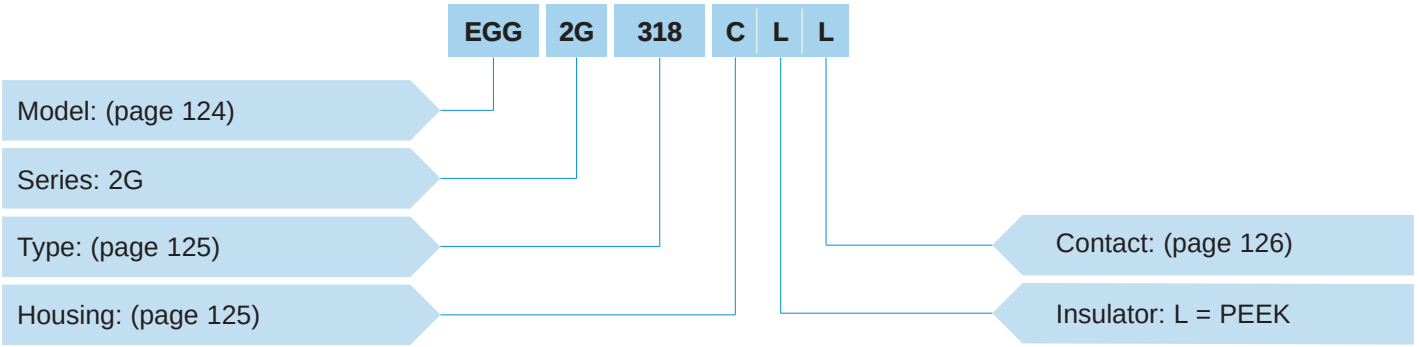

EGG.2G.318.CLL = fixed receptacle, 2G series, multicontact type with 18 contacts, outer shell in chrome-plated brass, PEEK insulator, female solder contacts.

Free receptacle

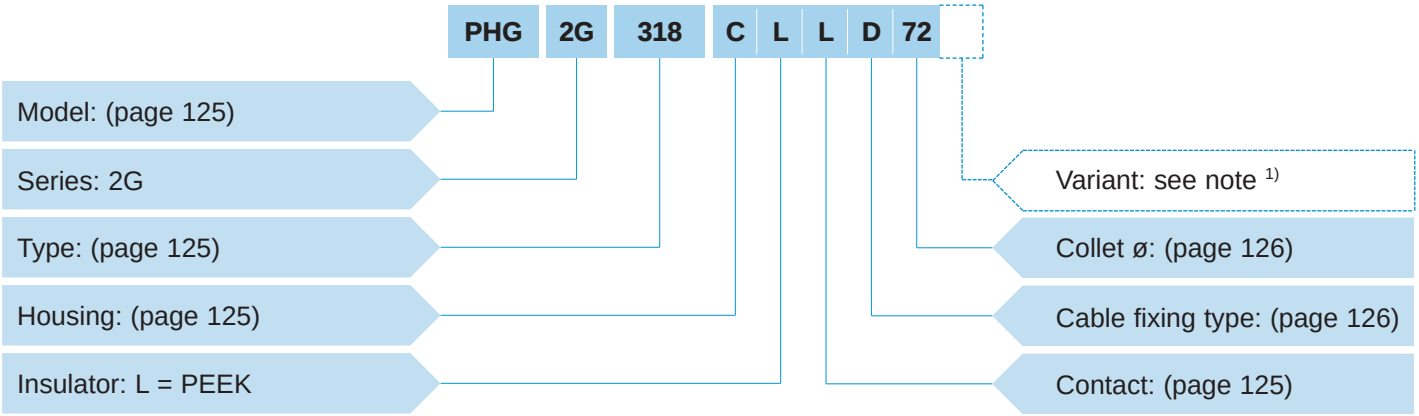

PHG.2G.318.CLLD72 = straight receptacle with cable collet, 2G series, multicontact type with 18 contacts, outer shell in chrome-plated brass, PEEK insulator, female solder contacts, D type collet for 7.2 mm diameter cable.

Note: 1) The «Variant» position of the part number is used to specify the presence of a nut for fitting a bend relief, a «Z» should be indicated and a bend relief can be ordered separately as indicated in the «Accessories» section. An order for a connector with bend relief should thus include two part numbers.

Models

FGG.2G Straight plug, key (G), cable collet

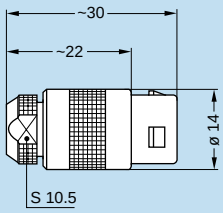

Availabiltiy: ○

FGG.2G Straight plug, key (G), cable collet and nut for fitting a bend relief

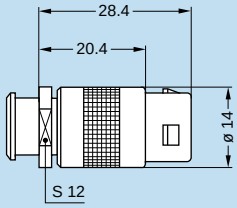

Availabiltiy: ○

Note: The bend relief must be ordered separately (see page 137).

EGG.2G Fixed receptacle, nut fixing, key (G)

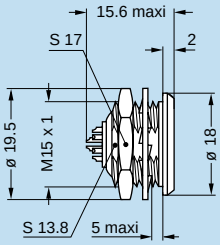

Availabiltiy: ○

Panel cut-out (see page 127)

ECG.2G Fixed receptacle with two nuts, key (G) (back panel mounting)

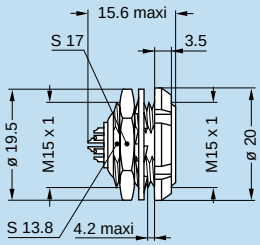

Availabiltiy: ○

Panel cut-out (see page 127)

ECG.2G Fixed receptacle with two nuts, key (G), straight contact for printed circuit (back panel mounting)

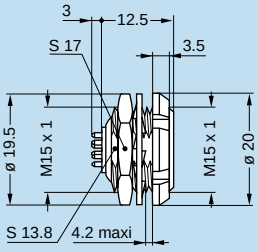

Availabiltiy: ○

Panel cut-out (see page 127)

PCB drilling pattern (page 127)

EYG.2G Fixed receptacle, key (G), protruding shell (screw fixing on the panel)

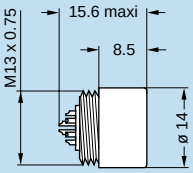

Availabiltiy: ○

Panel cut-out (see page 127)

Note: All dimensions are in millimeters.

● Standard, typically 0-6 weeks delivery for quantities of 250 or less.
○ Non-standard product, contact LEMO USA, typically 6-12 weeks delivery for quantities of 250 or less.
Non-standard product is defined as any product which contains one or more components which are not standard.

PHG.2G Free receptacle, key (G), cable collet

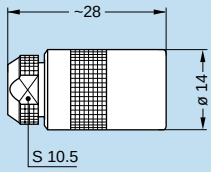

Availabiltiy: ○

PHG.2G Free receptacle, key (G), cable collet and nut for fitting a bend relief

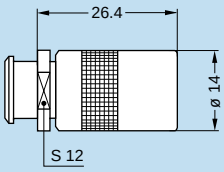

Availabiltiy: ○

Note: The bend relief must be ordered separately (see page 137).

Types

Male solder contacts	Female solder contacts	Reference	Number of contacts	ø A (mm)	Contact type availability: Solder	Contact type availability: Printed circuit	Test voltage (kV rms)[1) 2)]	Test voltage (kV dc)[1) 2)]	Rated current (A)[1)]
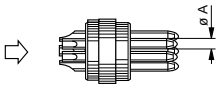	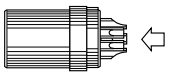	318	18	0.7	○	○	1.4	2.0	5.5
									

Note: [1)] **See calculation method, caution and suggested standard on page 11.**
[2)] Lowest measured value; contact to contact or contact to shell.

Housings

Ref.	Material	Surface treatment: Outer shell and collet nut	Surface treatment: Latch sleeve and grounding crown	Note
C	Brass	chrome	nickel	■
N	Brass	nickel	nickel	□
K	Brass	black chrome	nickel	■

■ First choice alternative □ Special order alternative

Contact

Ref.	Contact type
A	Male solder
L	Female solder
N	Female printed circuit

● Standard, typically 0-6 weeks delivery for quantities of 250 or less.
○ Non-standard product, contact LEMO USA, typically 6-12 weeks delivery for quantities of 250 or less.
Non-standard product is defined as any product which contains one or more components which are not standard.

Collets

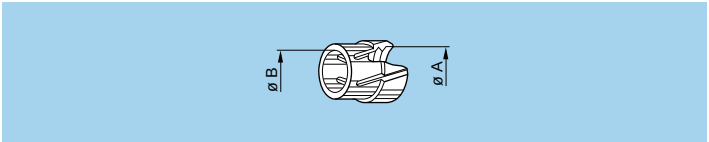

Reference		Collet ø		Cable ø		Part number of the collet [1]	Availability
Type	ø	ø A	ø B	max.	min.		
D	52	5.2	–	5.1	4.5	FFA.2C.752.DN	○
D	62	6.2	–	6.1	5.5	FFA.2C.762.DN	○
D	72	7.2	6.2	7.1	6.5	FFA.2C.772.DN	○
D	80	8.0	6.2	7.9	7.5	FFA.2C.780.DN	○

Note:
[1] For ordering collets separately.
All dimensions are in millimeters.

Accessories

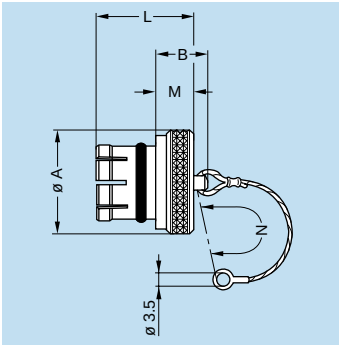

BRE Blanking caps for fixed and free receptacles

Part number	Dimensions (mm)					Availability
	A	B	L	M	N	
BRE.2G.200.NAS	18	12	10.6	6.0	85	○

Note: These caps are suitable for use with any alignment key configuration. The last letter «S» of the part number stands for the material of the O ring (silicone rubber). O-rings made from FPM are also available; if required, replace the letter «S» by «V».

- Body material: Nickel-plated brass (Ni 3 µm)
- Lanyard material: Stainless steel
- O-ring material: Silicone rubber or FPM
- Maximum operating temperature: 392° F
- Watertightness: IP61 according to IEC 60529

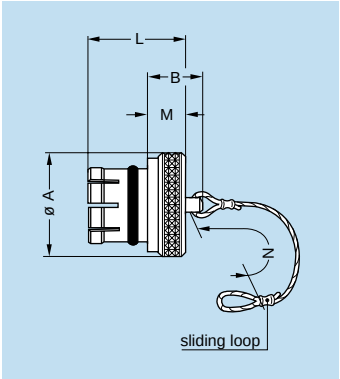

BRF Blanking caps for fixed receptacles

Part number	Dimensions (mm)					Availability
	A	B	L	M	N	
BRF.2G.200.NAS	18	12	14.0	6.0	85	○

Note: This caps are suitable for use with any alignment key configuration. The last letter «S» of the part number stands for the material of the O ring (silicone rubber). O-rings made from FPM are also available; if required, replace the letter «S» by «V».

- Body material: Nickel-plated brass (Ni 3 µm)
- Lanyard material: Stainless steel
- O-ring material: Silicone rubber or FPM
- Maximum operating temperature: 392° F
- Watertightness: IP61 according to IEC 60529

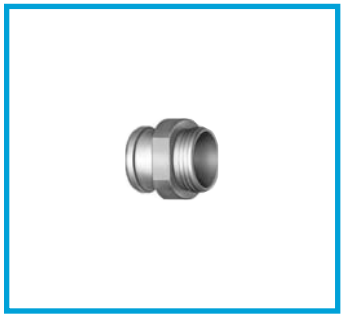

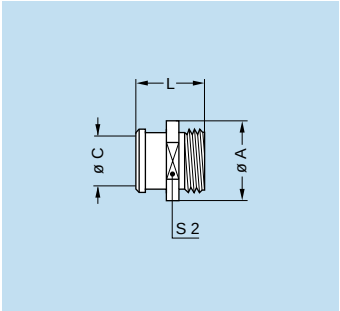

FFM Nut for bend relief

Part number	Dimensions (mm)				Availability
	A	C	L	S2	
FFM.2C.130.LC	14	8	12.2	12	○

Note: For bend reliefs to be used with this nut see section «Accessories» page 137.

- Material: Chrome-plated brass (0.3 µm)

Note: Other accessories are also available. See section «Accessories» on page 129.

● Standard, typically 0-6 weeks delivery for quantities of 250 or less.
○ Non-standard product, contact LEMO USA, typically 6-12 weeks delivery for quantities of 250 or less.
Non-standard product is defined as any product which contains one or more components which are not standard.

Tooling

Please consult the «Tooling» section (page 129).

Panel cut-outs

Panel cut-outs

EGG - ECG

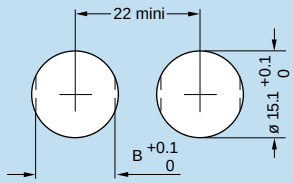

EYG

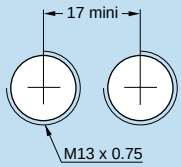

PCB drilling pattern

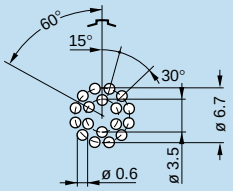

Note: Mounting nut torque – 6 Nm (1N = 0.102 kg)

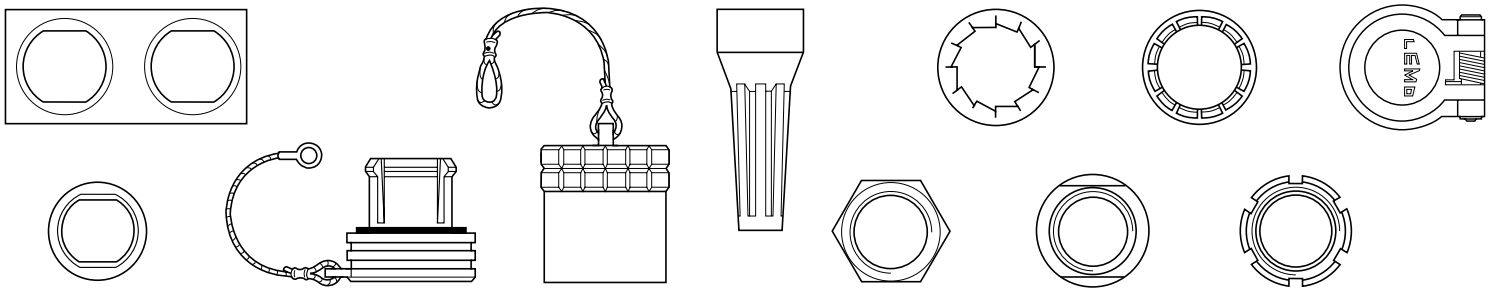

• Accessories

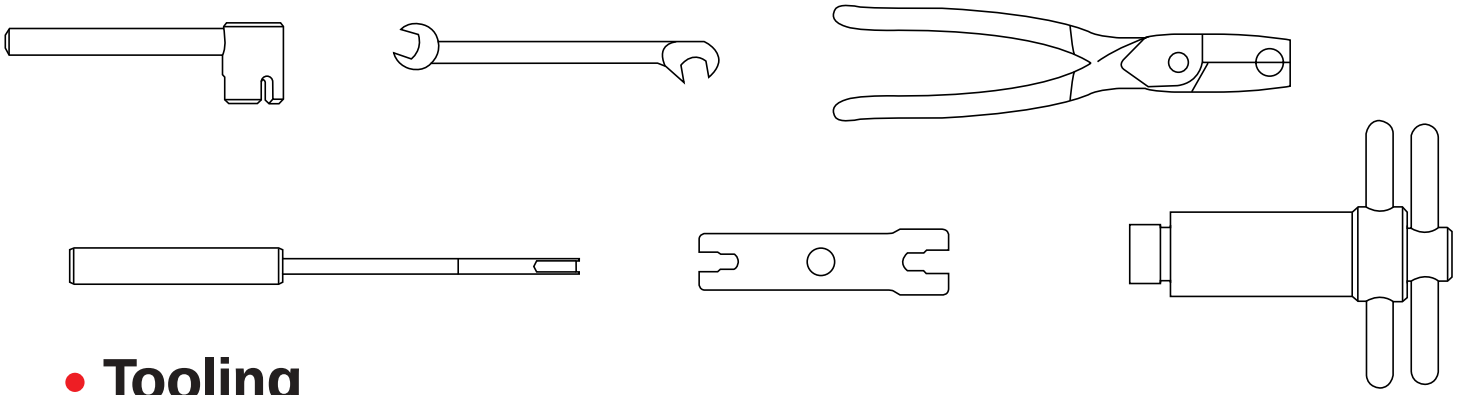

• Tooling

Accessories

FGG-EGG Insulators for crimp contacts

male

female

	Type	Insulator part number			
		Male contact	Avail-ability	Female contact	Avail-ability
00	302	FGG.00.302.YL	○	EGG.00.402.YL	○
	303	FGG.00.303.YL	○	EGG.00.403.YL	○
	304	FGG.00.304.YL	○	EGG.00.404.YL	○
0B	302	FGG.0B.302.YL	●	EGG.0B.402.YL	●
	303	FGG.0B.303.YL	●	EGG.0B.403.YL	●
	304	FGG.0B.304.YL	●	EGG.0B.404.YL	●
	305	FGG.0B.305.YL	●	EGG.0B.405.YL	●
	306	FGG.0B.306.YL	○	-	
	307	FGG.0B.307.YL	○	-	
	309	FGG.0B.309.YL	○	-	
1B	302	FGG.1B.302.YL	○	EGG.1B.402.YL	○
	303	FGG.1B.303.YL	●	EGG.1B.403.YL	○
	304	FGG.1B.304.YL	●	EGG.1B.404.YL	●
	305	FGG.1B.305.YL	●	EGG.1B.405.YL	○
	306	FGG.1B.306.YL	●	EGG.1B.406.YL	●
	307	FGG.1B.307.YL	●	EGG.1B.407.YL	○
	308	FGG.1B.308.YL	○	EGG.1B.408.YL	○
	310	FGG.1B.310.YL	○	-	
	314	FGG.1B.314.YL	○	-	
	316	FGG.1B.316.YL	○	-	
2B	302	FGG.2B.302.YL	○	EGG.2B.402.YL	○
	303	FGG.2B.303.YL	○	EGG.2B.403.YL	○
	304	FGG.2B.304.YL	●	EGG.2B.404.YL	○
	305	FGG.2B.305.YL	○	EGG.2B.405.YL	○
	306	FGG.2B.306.YL	●	EGG.2B.406.YL	○
	307	FGG.2B.307.YL	●	EGG.2B.407.YL	○
	308	FGG.2B.308.YL	○	EGG.2B.408.YL	○
	310	FGG.2B.310.YL	○	EGG.2B.410.YL	○
	312	FGG.2B.312.YL	○	EGG.2B.412.YL	○
	314	FGG.2B.314.YL	○	EGG.2B.414.YL	○
	316	FGG.2B.316.YL	○	EGG.2B.416.YL	○
	318	FGG.2B.318.YL	○	EGG.2B.418.YL	○
	319	FGG.2B.319.YL	○	EGG.2B.419.YL	○
	326	FGG.2B.326.YL	○	-	
	332	FGG.2B.332.YL	○	-	
3B	302	FGG.3B.302.YL	○	EGG.3B.402.YL	○
	303	FGG.3B.303.YL	○	EGG.3B.403.YL	○
	304	FGG.3B.304.YL	○	EGG.3B.404.YL	○
	305	FGG.3B.305.YL	○	EGG.3B.405.YL	○
	306	FGG.3B.306.YL	○	EGG.3B.406.YL	○
	307	FGG.3B.307.YL	○	EGG.3B.407.YL	○

	Type	Insulator part number			
		Male contact	Avail-ability	Female contact	Avail-ability
3B	308	FGG.3B.308.YL	●	EGG.3B.408.YL	○
	309	FGG.3B.309.ML	○	EGG.3B.409.ML	○
	310	FGG.3B.310.YL	●	EGG.3B.410.YL	○
	312	FGG.3B.312.YL	●	EGG.3B.412.YL	○
	314	FGG.3B.314.YL	○	EGG.3B.414.YL	○
	316	FGG.3B.316.YL	○	EGG.3B.416.YL	○
	318	FGG.3B.318.YL	○	EGG.3B.418.YL	○
	320	FGG.3B.320.YL	○	EGG.3B.420.YL	○
	322	FGG.3B.322.YL	○	EGG.3B.422.YL	○
	324	FGG.3B.324.YL	○	EGG.3B.424.YL	○
	326	FGG.3B.326.YL	○	EGG.3B.426.YL	○
	330	FGG.3B.330.YL	○	EGG.3B.430.YL	○
4B	304	FGG.4B.304.YL	○	EGG.4B.404.YL	○
	306	FGG.4B.306.YL	○	EGG.4B.406.YL	○
	307	FGG.4B.307.YL	○	EGG.4B.407.YL	○
	310	FGG.4B.310.YL	○	EGG.4B.410.YL	○
	312	FGG.4B.312.YL	○	EGG.4B.412.YL	○
	316	FGG.4B.316.YL	○	EGG.4B.416.YL	○
	320	FGG.4B.320.YL	○	EGG.4B.420.YL	○
	324	FGG.4B.324.YL	○	EGG.4B.424.YL	○
	330	FGG.4B.330.YL	○	EGG.4B.430.YL	○
	340	FGG.4B.340.YL	○	EGG.4B.440.YL	○
5B	304	FGG.5B.304.ML	○	EGG.5B.404.ML	○
	310	FGG.5B.310.YL	○	EGG.5B.410.YL	○
	314	FGG.5B.314.YL	○	EGG.5B.414.YL	○
	316	FGG.5B.316.YL	○	EGG.5B.416.YL	○
	320	FGG.5B.320.YL	○	EGG.5B.420.YL	○
	330	FGG.5B.330.YL	○	EGG.5B.430.YL	○
	340	FGG.5B.340.YL	○	EGG.5B.440.YL	○
	348	FGG.5B.348.YL	○	EGG.5B.448.YL	○
	350	FGG.5B.350.ML	○	EGG.5B.450.ML	○
	354	FGG.5B.354.YL	○	EGG.5B.454.YL	○
	364	FGG.5B.364.YL	○	EGG.5B.464.YL	○

Note: Each insulator can be used both for crimp contacts of normal shape (fig. 1) or with reduced solder cups (fig. 2) as shown on page 131,132.

● Standard, typically 0-6 weeks delivery for quantities of 250 or less.
○ Non-standard product, contact LEMO USA, typically 6-12 weeks delivery for quantities of 250 or less.
Non-standard product is defined as any product which contains one or more components which are not standard.

FGG-EGG Crimp contacts

Fig. 1

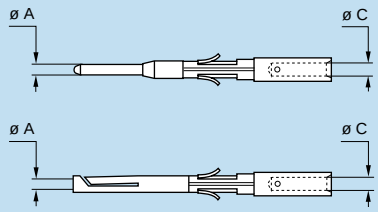

Note:
See next page for additional style

	Types	ø A (mm)	ø C (mm)	Contact part number			
				Male	Avail-ability	Female	Avail-ability
00	302	0.5	0.45	FGG.00.554.ZZC	○	EGG.00.654.ZZM	○
	303	0.5	0.45	FGG.00.554.ZZC	○	EGG.00.654.ZZM	○
	304	0.5	0.45	FGG.00.554.ZZC	○	EGG.00.654.ZZM	○
0B	302/303	0.9	1.10	FGG.0B.560.ZZC	●	EGG.0B.660.ZZM	●
	304/305	0.7	0.80	FGG.0B.555.ZZC	●	EGG.0B.655.ZZM	●
	306/307/309	0.5	0.45	FGG.0B.554.ZZC	○	EGG.0B.654.ZZM	○
0S	302	0.9	1.10	FGG.0B.560.ZZC	●	EGG.0B.660.ZZM	●
1B	302/303	1.3	1.40	FGG.1B.565.ZZC	●	EGG.1B.665.ZZM	○
	304/305	0.9	1.10	FGG.1B.560.ZZC	●	EGG.1B.660.ZZM	●
	306/307/308	0.7	0.80	FGG.1B.555.ZZC	●	EGG.1B.655.ZZM	●
	310/314/316	0.5	0.45	FGG.1B.554.ZZC	○	EGG.1B.654.ZZM	○
1S	302	1.3	1.40	FGG.1B.565.ZZC	●	EGG.1B.665.ZZM	●
	304	0.9	1.10	FGG.1B.560.ZZC	●	EGG.1B.660.ZZM	●
2B	302	2.0	2.40	FGG.2B.575.ZZC	●	EGG.2B.675.ZZM	●
	303	1.6	1.90	FGG.2B.570.ZZC	●	EGG.2B.670.ZZM	●
	304/305	1.3	1.40	FGG.2B.565.ZZC	●	EGG.2B.665.ZZM	●
	306/307	1.3	1.40	FGG.2B.565.ZZC	●	EGG.2B.665.ZZM	●
	308/310	0.9	1.10	FGG.2B.560.ZZC	●	EGG.2B.660.ZZM	●
	312/314/316	0.7	0.80	FGG.2B.555.ZZC	●	EGG.2B.655.ZZM	●
	318/319	0.7	0.80	FGG.2B.555.ZZC	●	EGG.2B.655.ZZM	●
	326/332	0.5	0.45	FGG.2B.554.ZZC	○	EGG.2B.654.ZZM	○
2S	306	1.3	1.40	FGG.2B.565.ZZC	●	EGG.2B.665.ZZM	●
3B	302	3.0	2.90	FGG.3B.580.ZZC	○	EGG.3B.680.ZZM	○
	303/304/309	2.0	2.40	FGG.3B.575.ZZC	●	EGG.3B.675.ZZM	●
	305/306/307	1.6	1.90	FGG.3B.570.ZZC	●	EGG.3B.670.ZZM	●
	308/309/310	1.3	1.40	FGG.3B.565.ZZC	●	EGG.3B.665.ZZM	●
	312/314	0.9	1.10	FGG.3B.560.ZZC	●	EGG.3B.660.ZZM	●
	316/318	0.9	1.10	FGG.3B.560.ZZC	●	EGG.3B.660.ZZM	●
	320/322/324	0.7	0.80	FGG.3B.555.ZZC	●	EGG.3B.655.ZZM	●
	326/330	0.7	0.80	FGG.3B.555.ZZC	●	EGG.3B.655.ZZM	●
4B	304	3.0	2.90	FGG.4B.580.ZZC	○	EGG.4B.680.ZZM	○
	306/307	2.0	2.40	FGG.4B.575.ZZC	○	EGG.4B.675.ZZM	○
	310	1.6	1.90	FGG.4B.570.ZZC	○	EGG.4B.670.ZZM	○
	312	1.3	1.40	FGG.4B.565.ZZC	○	EGG.4B.665.ZZM	○
	316/320	0.9	1.10	FGG.4B.560.ZZC	○	EGG.4B.660.ZZM	○
	324/330	0.9	1.10	FGG.4B.560.ZZC	○	EGG.4B.660.ZZM	○
	340	0.7	0.80	FGG.4B.555.ZZC	○	EGG.4B.655.ZZM	○
5B	304	4.0	4.00	FGG.5B.582.ZZC	○	EGG.5B.682.ZZM	○
	310	3.0	2.90	FGG.5B.580.ZZC	○	EGG.5B.680.ZZM	○
	314/316	2.0	2.40	FGG.5B.575.ZZC	○	EGG.5B.675.ZZM	○
	320	1.6	1.90	FGG.5B.570.ZZC	○	EGG.5B.670.ZZM	○
	330/340/348	1.3	1.40	FGG.5B.565.ZZC	○	EGG.5B.665.ZZM	○
	350/354/364	0.9	1.10	FGG.5B.560.ZZC	○	EGG.5B.660.ZZM	○

● Standard, typically 0-6 weeks delivery for quantities of 250 or less.
○ Non-standard product, contact LEMO USA, typically 6-12 weeks delivery for quantities of 250 or less.
Non-standard product is defined as any product which contains one or more components which are not standard.

FGG-EGG Crimp contacts

Fig. 2

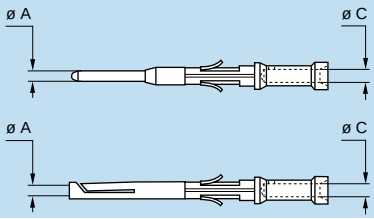

	Types	ø A (mm)	ø C (mm)	Contact part number			
				Male	Avail-ability	Female	Avail-ability
0B	302/303	0.9	0.80	FGG.0B.561.ZZC	○	EGG.0B.661.ZZM	○
	302/303	0.9	0.45	FGG.0B.562.ZZC	○	EGG.0B.662.ZZM	○
	304/305	0.7	0.45	FGG.0B.556.ZZC	○	EGG.0B.656.ZZM	○
0S	302	0.9	0.80	FGG.0B.561.ZZC	○	EGG.0B.661.ZZM	○
	302	0.9	0.45	FGG.0B.562.ZZC	○	EGG.0B.662.ZZM	○
1B	302/303	1.3	1.10	FGG.1B.566.ZZC	○	EGG.1B.666.ZZM	○
	304/305	0.9	0.80	FGG.1B.561.ZZC	○	EGG.1B.661.ZZM	○
	306/307/308	0.7	0.45	FGG.1B.556.ZZC	○	EGG.1B.656.ZZM	○
1S	302	1.3	1.10	FGG.1B.566.ZZC	○	EGG.1B.666.ZZM	○
	304	0.9	0.80	FGG.1B.561.ZZC	○	EGG.1B.661.ZZM	○
2B	302	2.0	1.90	FGG.2B.576.ZZC	○	EGG.2B.676.ZZM	○
	303	1.6	1.40	FGG.2B.571.ZZC	○	EGG.2B.671.ZZM	○
	304/305	1.3	1.10	FGG.2B.566.ZZC	○	EGG.2B.666.ZZM	○
	306/307	1.3	1.10	FGG.2B.566.ZZC	○	EGG.2B.666.ZZM	○
	304/305	1.3	0.80	FGG.2B.567.ZZC	○	EGG.2B.667.ZZM	○
	306/307	1.3	0.80	FGG.2B.567.ZZC	○	EGG.2B.667.ZZM	○
	308/310	0.9	0.80	FGG.2B.561.ZZC	○	EGG.2B.661.ZZM	○
	308/310	0.9	0.45	FGG.2B.562.ZZC	○	EGG.2B.662.ZZM	○
	312/314/316	0.7	0.45	FGG.2B.556.ZZC	○	EGG.2B.656.ZZM	○
	318/319	0.7	0.45	FGG.2B.556.ZZC	○	EGG.2B.656.ZZM	○
2S	306	1.3	1.10	FGG.2B.566.ZZC	○	EGG.2B.666.ZZM	○
	306	1.3	0.80	FGG.2B.567.ZZC	○	EGG.2B.667.ZZM	○
3B	303/304/309	2.0	1.90	FGG.3B.576.ZZC	○	EGG.3B.676.ZZM	○
	305/306/307	1.6	1.40	FGG.3B.571.ZZC	○	EGG.3B.671.ZZM	○
	308/309/310	1.3	1.10	FGG.3B.566.ZZC	○	EGG.3B.666.ZZM	○
	312/314	0.9	0.80	FGG.3B.561.ZZC	○	EGG.3B.661.ZZM	○
	316/318	0.9	0.80	FGG.3B.561.ZZC	○	EGG.3B.661.ZZM	○
	320/322/324	0.7	0.45	FGG.3B.556.ZZC	○	EGG.3B.656.ZZM	○
	326/330	0.7	0.45	FGG.3B.556.ZZC	○	EGG.3B.656.ZZM	○
4B	306/307	2.0	1.90	FGG.4B.576.ZZC	○	EGG.4B.676.ZZM	○
	310	1.6	1.40	FGG.4B.571.ZZC	○	EGG.4B.671.ZZM	○
	312	1.3	1.10	FGG.4B.566.ZZC	○	EGG.4B.666.ZZM	○
	316/320	0.9	0.80	FGG.4B.561.ZZC	○	EGG.4B.661.ZZM	○
	324/330	0.9	0.80	FGG.4B.561.ZZC	○	EGG.4B.661.ZZM	○
	340	0.7	0.45	FGG.4B.556.ZZC	○	EGG.4B.656.ZZM	○
5B	314/316	2.0	1.90	FGG.5B.576.ZZC	○	EGG.5B.676.ZZM	○
	320	1.6	1.40	FGG.5B.571.ZZC	○	EGG.5B.671.ZZM	○
	330/340/348	1.3	1.10	FGG.5B.566.ZZC	○	EGG.5B.666.ZZM	○
	350/354/364	0.9	0.80	FGG.5B.561.ZZC	○	EGG.5B.661.ZZM	○

Data Subject to Change

● Standard, typically 0-6 weeks delivery for quantities of 250 or less.
○ Non-standard product, contact LEMO USA, typically 6-12 weeks delivery for quantities of 250 or less.
Non-standard product is defined as any product which contains one or more components which are not standard.

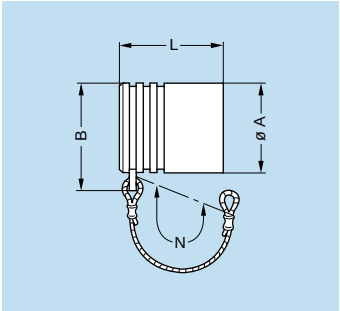

BFG Plug caps

Part number	Series	Dimensions (mm)				Availability
		A	B	L	N	
BFG.00.100 PCSG	00	7.5	10	10.0	60	○
BFG.0B.100.PCSG	0S-0B	9.5	12	12.2	85	○
BFG.1B.100.PCSG	1S-1B	12.0	15	13.8	85	○
BFG.2B.100.PCSG	2S-2B	15.0	18	15.0	85	○
BFG.3B.100.PCSG	3S-3B	18.5	22	18.5	95	○

- Body material: Polyoxymethylene (POM) grey (or black)
- Cord material: Polyamide 6, white (or black)
- Gasket material: Silicone rubber
- Maximum operating temperature: 212° F
- Watertightness: IP61 according to IEC 60529

Note: This cap is available only with an alignment key (G). Upon request this cap can be supplied in black and the last letter «G» of the part number should be replaced with «N».

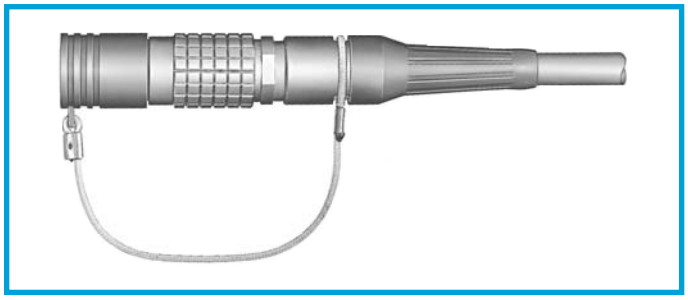

Fitting the cord

Slide the plug into the loop of the cord. Place the loop into the groove in front of the collet nut and tighten the loop.

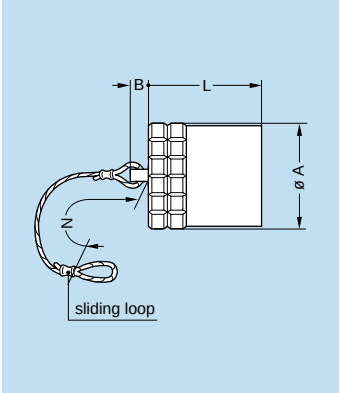

BFA Plug caps

Part number	Series	Dimensions (mm)				Availability
		A	B	L	N	
BFA.4S.100.NAS	4S	25.0	10	22.0	120	○
BFA.5S.100.NAS	5S	36.0	10	30.0	150	○
BFA.6S.100.NAS	6S	46.0	10	33.0	150	○

Note: The last letter «S» of the part number corresponds to the alignment key of the plug. The last letter «S» of the part number stands for the material of the O-ring (silicone rubber). O-rings made from FPM are also available; if required, replace the letter «S» by «V».

- Body material: Nickel-plated brass (Ni 3µm)
- Lanyard material: Stainless steel
- Crimp ferrule material: Nickel-plated brass + polyolefin
- O-ring material: Silicone rubber or FPM
- Maximum operating temperature: 275° F

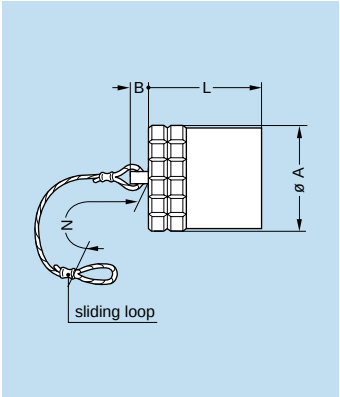

BFG Plug caps with key (G)

Part number	Series	Dimensions (mm)				Availability
		A	B	L	N	
BFG.4B.100.NAS	4B	25.0	10	20.0	120	○
BFG.5B.100.NAS	5B	36.0	10	27.0	150	○

Note: This cap is available only with an alignment key (G). The last letter «S» of the part number corresponds to the alignment key of the plug. The last letter «S» of the part number stands for the material of the O-ring (silicone rubber). O-rings made from FPM are also available; if required, replace the letter «S» by «V».

- Body material: Nickel-plated brass (Ni 3µm)
- Lanyard material: Stainless steel
- Crimp ferrule material: Nickel-plated brass + polyolefin
- O-ring material: Silicone rubber or FPM
- Maximum operating temperature: 275° F

● Standard, typically 0-6 weeks delivery for quantities of 250 or less.
○ Non-standard product, contact LEMO USA, typically 6-12 weeks delivery for quantities of 250 or less.
Non-standard product is defined as any product which contains one or more components which are not standard.

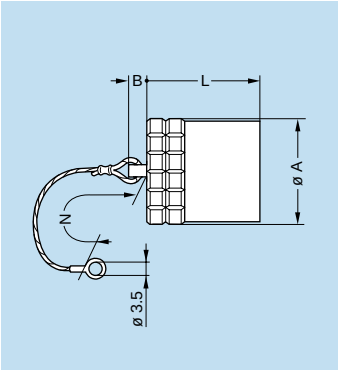

BHG Plug caps, nut fixing or flange

Part number	Series	Dimensions (mm)				Availability
		A	B	L	N	
BHG.4B.100.NAS	4B	25.0	10	20.0	120	○
BHG.5B.100.NAS	5B	36.0	10	27.0	150	○

- Body material: Nickel-plated brass (Ni 3µm)
- Lanyard material: Stainless steel
- Crimp ferrule material: Nickel-plated brass + polyolefin
- O-ring material: Silicone rubber or FPM
- Maximum operating temperature: 275° F

Note: This cap is available only with an alignment key (G). The last letter «S» of the part number corresponds to the alignment key of the plug. The last letter «S» of the part number stands for the material of the O-ring (silicone rubber). O-rings made from FPM are also available; if required, replace the letter «S» by «V».

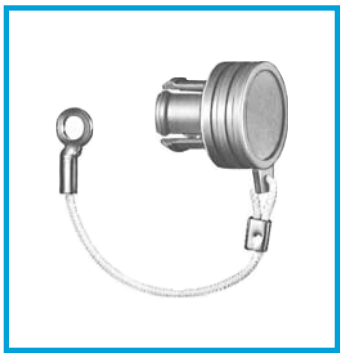

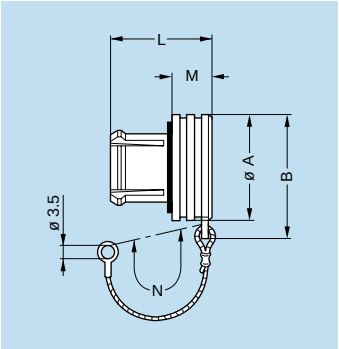

BRA Blanking caps for fixed receptacles and free straight receptacles

Part number	Series	Dimensions (mm)					Avail-ability
		A	B	L	M	N	
BRA.00.200.PCSG	00	7.5	10.0	8.2	2.7	60	○
BRA.0B.200.PCSG	0S-0B	10.0	12.5	11.0	4.8	60	○
BRA.1B.200.PCSG	1S-1B	14.0	17.0	13.5	5.6	60	○
BRA.2B.200.PCSG	2S-2B 2C-2G	18.0	21.0	14.5	6.0	60	○
BRA.3B.200.PCSG	3S-3B	22.0	25.5	17.0	7.0	60	○

- Body material: Polyoxymethylene (POM) grey (or black)
- Cord material: Polyamide 6, white (or black)
- Gasket material: Silicone rubber
- Maximum operating temperature: 212° F
- Watertightness: IP61 according to IEC 60529

Note: These caps are suitable for use with any alignment key configuration. On request this cap can be supplied in black. If so, replace the last letter «G» of the part number by «N».

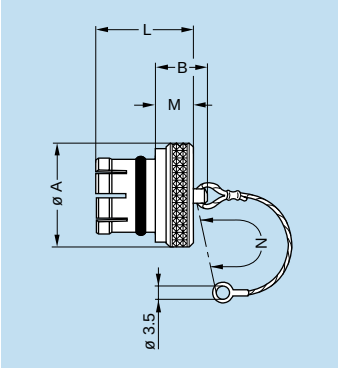

BRE Blanking caps for fixed and free receptacles

Part number	Series	Dimensions (mm)					Avail-ability
		A	B	L	M	N	
BRE.00.200.NAS	00	8	9.5	8.8	3.5	60	○
BRE.0S.200.NAS	0S-0B	10	10.5	10.5	4.5	85	○
BRE.1S.200.NAS	1S-1B	14	11.0	12.5	5.0	85	○
BRE.2S.200.NAS	2S-2B	18	12.0	14.0	6.0	85	○
BRE.3S.200.NAS	3S-3B	22	14.0	18.0	8.0	120	○
BRE.4S.200.NAS	4S-4B	28	20.0	23.0	10.0	120	○
BRE.5S.200.NAS	5S-5B	40	22.0	30.0	12.0	150	○
BRE.6S.200.NAS	6S	54	22.0	30.0	12.0	150	○

- Body material: Nickel-plated brass (Ni 3 µm)
- Lanyard material: Stainless steel
- Crimp ferrule material: Nickel-plated brass + polyolefin
- O-ring material: Silicone rubber or FPM
- Maximum operating temperature: 275° F
- Watertightness: IP61 according to IEC 60529

Note: These caps are suitable for use with any alignment key configuration. The last letter «S» of the part number stands for the O-ring material (silicone rubber). O-rings made from FPM are also available; if required, replace the letter «S» by «V».

● Standard, typically 0-6 weeks delivery for quantities of 250 or less.
○ Non-standard product, contact LEMO USA, typically 6-12 weeks delivery for quantities of 250 or less.
Non-standard product is defined as any product which contains one or more components which are not standard.

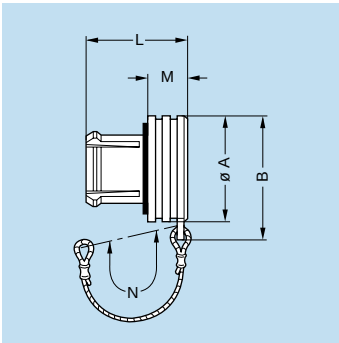

- Body material: Polyoxymethylene (POM) grey (or black)
- Cord material: Polyamide 6, white (or black)
- Gasket material: Silicone rubber
- Maximum operating temperature: 212° F
- Watertightness: IP61 according to IEC 60529

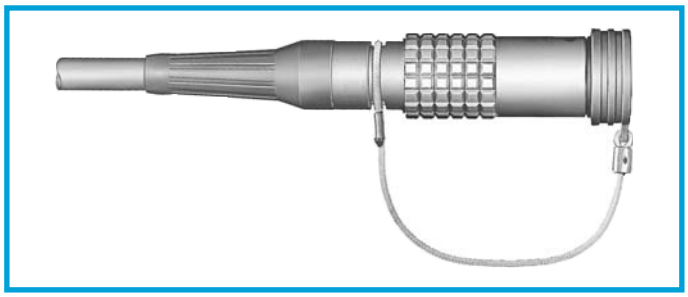

BRD Blanking caps for free receptacles

Part number	Series	Dimensions (mm)					Avail-ability
		A	B	L	M	N	
BRD.00.200.PCSG	00	7.5	10.0	8.2	2.7	60	○
BRD.0B.200.PCSG	0S-0B	10.0	12.5	11.0	4.8	85	○
BRD.1B.200.PCSG	1S-1B	14.0	17.0	13.5	5.6	85	○
BRD.2B.200.PCSG	2S-2B	18.0	21.0	14.5	6.0	85	○
BRD.3B.200.PCSG	3S-3B	22.0	25.5	17.0	7.0	95	○

Note: On request this cap is available in black. If required, replace the last letter «G» of the part number by «N».

Fitting the cord

Slide the receptacle into the loop of the cord.
Place the loop into the groove in front of the collet nut.
Tighten the loop.

● Standard, typically 0-6 weeks delivery for quantities of 250 or less.
○ Non-standard product, contact LEMO USA, typically 6-12 weeks delivery for quantities of 250 or less.
Non-standard product is defined as any product which contains one or more components which are not standard.

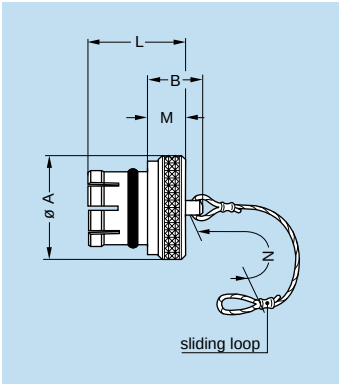

BRF Blanking caps for free receptacles

Part number	Series	Dimensions (mm)					Avail-ability
		A	B	L	M	N	
BRF.00.200.NAS	00	8	9.5	8.8	3.5	85	○
BRF.0S.200.NAS	0S-0B	10	10.5	10.5	4.5	85	○
BRF.1S.200.NAS	1S-1B	14	11.0	12.5	5.0	85	○
BRF.2S.200.NAS	2S-2B	18	12.0	14.0	6.0	85	○
BRF.3S.200.NAS	3S-3B	22	14.0	18.0	8.0	120	○
BRF.4S.200.NAS	4S-4B	28	20.0	23.0	10.0	120	○
BRF.5S.200.NAS	5S-5B	40	22.0	30.0	12.0	150	○
BRF.6S.200.NAS	6S	54	22.0	30.0	12.0	150	○

- Body material: Nickel-plated brass (Ni 3 µm)
- Lanyard material: Stainless steel
- Crimp ferrule material: Nickel-plated brass + polyolefin
- O-ring material: Silicone rubber or FPM
- Maximum operating temperature: 275° F
- Watertightness: IP61 according to IEC 60529

Note: These caps are suitable for use with any alignment key configuration. The last letter «S» of the part number stands for the O-ring material (silicone rubber). O-rings made from FPM are also available; if required, replace the letter «S» by «V».

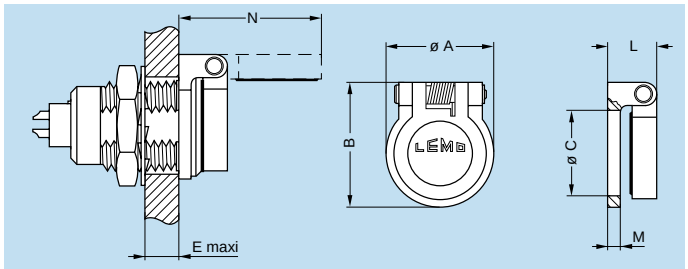

BRR Spring loaded dust caps for ERA, ERN and EG● receptacles or PSA and PK● fixed receptacles

Part number	Series	Dimensions (mm)							Avail-ability
		A	B	C	E	L	M	N	
BRR.0S.200.PZSG	0S-0B	11.0	13.3	9.0	5.8	5.0	1.2	15.3	○
BRR.1S.200.PZSG	1S-1B	14.2	17.1	12.0	6.0	6.3	1.5	20.3	○
BRR.2S.200.PZSG	2S-2B 2C-2G	18.6	22.4	15.2	6.5	8.2	2.0	26.2	○
BRR.3S.200.PZSG	3S-3B	22.5	26.5	18.2	9.0	8.8	2.5	30.8	○

Note: On request, this cap is available in black. If so replace the last letter «G» of the part number by «N».

- Body material: Polyoxymethylene (POM) grey (or black)
- Gasket material: Silicone rubber

- Spring material: Stainless steel
- Maximum operating temperature: 212° F
- Watertightness: IP61 according to IEC 60529

● Standard, typically 0-6 weeks delivery for quantities of 250 or less.
○ Non-standard product, contact LEMO USA, typically 6-12 weeks delivery for quantities of 250 or less.
Non-standard product is defined as any product which contains one or more components which are not standard.

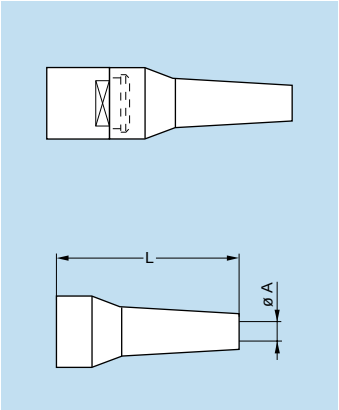

GM● Bend relief (Polyurethane)

A bend relief made from thermoplastic polyurethane elastomer (Desmopan 786) can be fitted over LEMO plugs and receptacles that are supplied with a specially fitted nut. They are available in nine different colors that match with the GRA insulating washers (see page 140).

Use the part numbers shown below to order this accessory separately.

Main characteristics

- Material: Polyurethane elastomer
- Temperature range in dry atmosphere: -40° F to +176° F

Part number	Dimensions (mm)				Series	Part number of nut for fitting the bend relief	Note	Avail-ability
	Bend relief		Cable ø					
	A	L	max.	min.				
GMA.00.012.DG	1.2	22	1.4	1.1	00	FFM.00.130.LC[1)] FFM.00.131.LC [2)]	[1)] For single contact connectors [2)] For multicontact connectors The «GMD» are thin bend reliefs (for very flexible cables).	○
GMA.00.018.DG	1.8	22	2.1	1.8				○
GMB.00.025.DG	2.5	22	2.8	2.5				○
GMB.00.028.DG	2.8	22	3.1	2.8				○
GMB.00.032.DG	3.2	22	3.5	3.2				○
GMD.00.025.DG	2.5	22	2.8	2.5				●
GMD.00.028.DG	2.8	22	3.1	2.8				●
GMD.00.032.DG	3.2	22	3.5	3.2				●
GMA.0B.025.DG	2.5	24	2.9	2.5	0B	FFM.0B.130.LC FFM.2B.132.LC [1)]	[1)] For use only with connectors from series 2B equipped with cable fixing type M and where a bend relief from series 0B is used.	●
GMA.0B.030.DG	3.0	24	3.4	3.0				●
GMA.0B.035.DG	3.5	24	3.9	3.5	0S	FFM.0S.130.LC		●
GMA.0B.040.DG	4.0	24	4.4	4.0				●
GMA.0B.045.DG	4.5	24	5.2	4.5				●
GMA.1B.025.DG	2.5	30	2.9	2.5	1B	FFM.1B.130.LC FFM.3B.131.LC [1)]	[1)] For use only with connectors from series 3B equipped with cable fixing type M and where a bend relief from series 1B is used.	○
GMA.1B.030.DG	3.0	30	3.4	3.0				●
GMA.1B.035.DG	3.5	30	3.9	3.5	1S	FFM.1S.130.LC		●
GMA.1B.040.DG	4.0	30	4.4	4.0				●
GMA.1B.045.DG	4.5	30	4.9	4.5				●
GMA.1B.054.DG	5.4	30	6.0	5.4				●
GMA.1B.065.DG	6.5	30	7.0	6.5				●
GMA.2B.040.DG	4.0	36	4.5	4.0	2B	FFM.2B.130.LC FFM.4B.132.LC [1)]	[1)]For use only with connectors from series 4B equipped with cable fixing type M and where a bend relief from series 2B is used.	○
GMA.2B.045.DG	4.5	36	5.0	4.5	2S	FFM.2S.130.LC		●
GMA.2B.050.DG	5.0	36	5.5	5.0				●
GMA.2B.060.DG	6.0	36	6.5	6.0				●
GMA.2B.070.DG	7.0	36	7.7	7.0				●
GMA.2B.080.DG	7.8	36	8.8	7.8	2C-2G	FFM.2C.130.LC		●
GMA.3B.050.DG	4.5	42	5.2	4.5	3S	FFM.3S.130.LC		●
GMA.3B.070.DG	7.0	42	7.9	7.0	3B	FFM.3B.130.LC		●
GMA.3B.080.DG	8.0	42	8.9	8.0				●
GMA.3B.090.DG	9.0	42	10.0	9.0	4S	FFM.4S.130.LC		●
GMA.4B.080.DG	8.0	60	9.0	8.0	4S	FFM.4S.130.LC		○
GMA.4B.010.DG	10.0	60	10.9	10.0				○
GMA.4B.011.DG	11.0	60	11.9	11.0	4B	FFM.4B.130.LC		○
GMA.4B.012.DG	12.0	60	13.0	12.0				○
GMA.4B.013.DG	13.5	60	14.5	13.5				○

Note: The last letter «G» of the part number indicates the grey color of the bend relief. For ordering a bend relief with another color, see table on page 138 and replace the letter «G» by the letter of the required color.
See also detailed information for each series: B series on page 55; S series on page 110.

● Standard, typically 0-6 weeks delivery for quantities of 250 or less.
○ Non-standard product, contact LEMO USA, typically 6-12 weeks delivery for quantities of 250 or less.
Non-standard product is defined as any product which contains one or more components which are not standard.

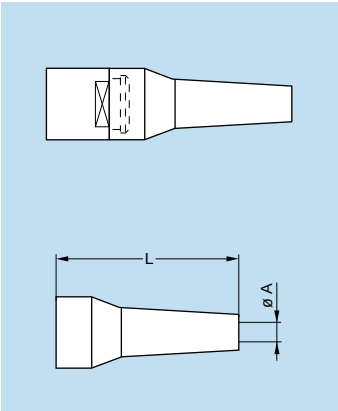

GMA Bend relief (Silicone)

A bend relief has been designed for connectors used in applications at high temperature or requiring vapor sterilization.

These bend reliefs are different from previous ones; their material, a silicone elastomer, is noted for its retention of flexibility over a wide temperature range. They are available in nine colors.

Use the part numbers shown below to order this accessory separately.

Main characteristics

- Material: Silicone elastomer VMQ
- Temperature range in dry atmosphere: -106° F to +392° F
- Temperature range in water steam: +284° F
- Inflammability: not flammable (no UL classification)

Part number	Dimensions (mm)				Series	Part number of nut for fitting the bend relief	Note	Avail-ability
	Bend relief		Cable ø					
	A	L	max.	min.				
GMA.0B.025.RG	2.5	27	2.9	2.5	0B	FFM.0B.130.LC FFM.2B.132.LC [1]	[1] For use only with connectors from series 2B equipped with cable fixing type M and where a bend relief from series 0B is used.	○
GMA.0B.030.RG	3.0	27	3.4	3.0				○
GMA.0B.035.RG	3.5	27	3.9	3.5	0S	FFM.0S.130.LC		○
GMA.0B.040.RG	4.0	27	4.4	4.0				○
GMA.0B.045.RG	4.5	27	5.2	4.5				○
GMA.1B.025.RG	2.5	34	2.9	2.5	1B	FFM.1B.130.LC FFM.3B.131.LC [1]	[1]For use only with connectors from series 3B equipped witt cable fixing type M and where a bend relief from series 1B is used.	○
GMA.1B.030.RG	3.0	34	3.4	3.0				○
GMA.1B.035.RG	3.5	34	3.9	3.5				○
GMA.1B.040.RG	4.0	34	4.4	4.0	1S	FFM.1S.130.LC		○
GMA.1B.045.RG	4.5	34	5.0	4.5				○
GMA.1B.051.RG	5.1	34	5.6	5.1				○
GMA.1B.057.RG	5.7	34	6.2	5.7				○
GMA.1B.063.RG	6.3	34	7.0	6.3				○
GMA.2B.040.RG	4.0	41	4.4	4.0	2B	FFM.2B.130.LC FFM.4B.132.LC [1]	[1]For use only with connectors from series 4B equipped with cable fixing type M and where a bend relief from series 2B is used.	○
GMA.2B.045.RG	4.5	41	5.0	4.5				○
GMA.2B.051.RG	5.1	41	5.6	5.1	2S	FFM.2S.130.LC		○
GMA.2B.057.RG	5.7	41	6.2	5.7				○
GMA.2B.063.RG	6.3	41	7.0	6.3				○
GMA.2B.071.RG	7.1	41	7.9	7.1	2C-2G	FFM.2C.130.LC		○
GMA.2B.080.RG	8.0	41	9.0	8.0				○

Note: The last letter «G» of the part number indicates the grey color of the bend relief. For ordering a bend relief with another color, see table on this page and replace the letter «G» by the letter of the required color.
See also detailed information for each series: B series on page 55; S series on page 110.

Note: The selection of pigments, which should remain stable at high temperature, is limited by new regulations. For this reason, some colors will be a shade different from those used for Desmopan bend reliefs. The selected solutions represent the best possible compromise.

Ref.	Color
A	blue
B	white
G	grey
J	yellow
M	brown

Ref.	Color
N	black
R	red
S	orange
V	green

● Standard, typically 0-6 weeks delivery for quantities of 250 or less.
○ Non-standard product, contact LEMO USA, typically 6-12 weeks delivery for quantities of 250 or less.
Non-standard product is defined as any product which contains one or more components which are not standard.

GM● Overall protective covering with bend relief for plugs and receptacles

Overall protective coverings with bend relief, type GMF for plugs and GMP for receptacles offer optimum protection against mechanical damage and give a protection index of IP65 according to IEC 60529 (mated position). These overall protective coverings with bend relief slide easily over the connector shell and are positioned by slightly pressing the bend relief backnut.

The special design of the overall protective covering for plugs provides for easy use of the push-pull self-latching system.

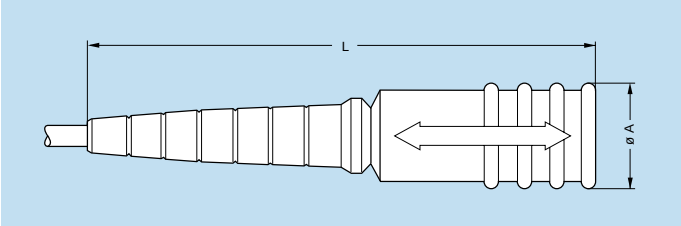

GMF Overall protective covering for plug

Reference		Dimensions (mm)				Availability
		Overall protective covering		Cable ø		
Model	Series	A	L	max.	min.	
GMF	0S-0B	14.7	60.5	3.5	1.0	○
GMF	1S-1B	16.0	72.0	6.2	2.5	○
GMF	2S-2B	22.0	95.0	8.2	5.0	○

- Material: Elastomere
- Operating temperature: -22° F to +248° F

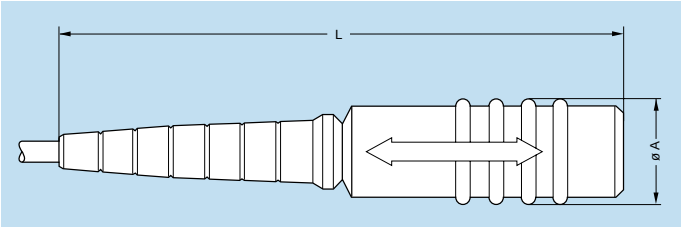

GMP Overall protective covering for free receptacle

Reference		Dimensions (mm)				Availability
		Overall protective covering		Cable ø		
Model	Series	A	L	max.	min.	
GMP	0S-0B	14.7	69.5	3.5	1.0	○
GMP	1S-1B	16.0	79.0	6.2	2.5	○
GMP	2S-2B	22.0	102.5	8.2	5.0	○

- Material: Elastomere
- Operating temperature: -22° F to +248° F

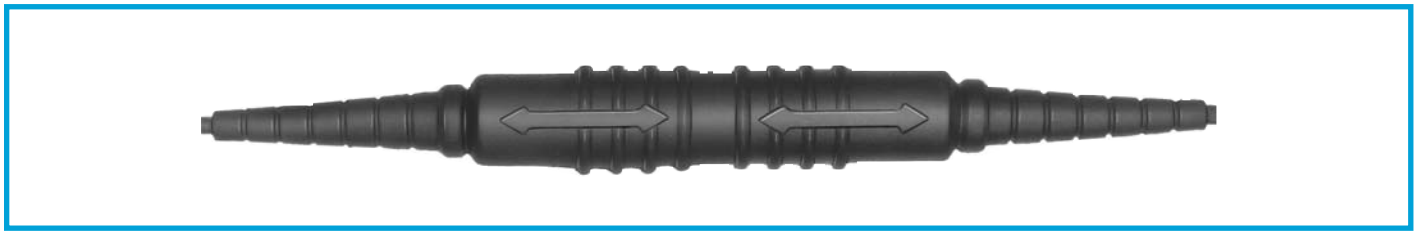

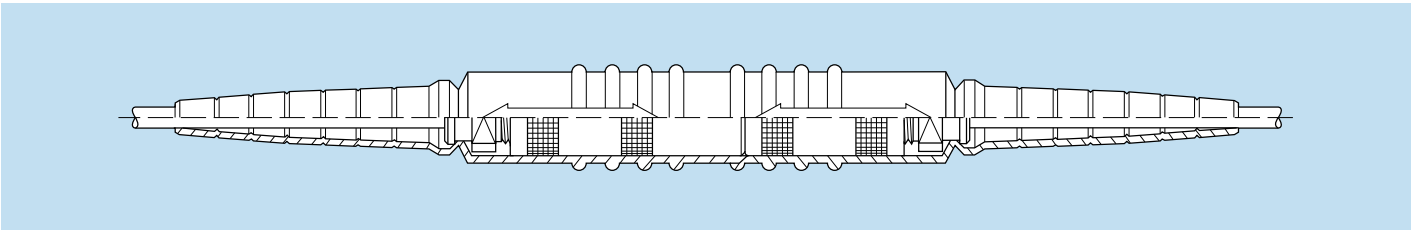

● Standard, typically 0-6 weeks delivery for quantities of 250 or less.
○ Non-standard product, contact LEMO USA, typically 6-12 weeks delivery for quantities of 250 or less.
Non-standard product is defined as any product which contains one or more components which are not standard.

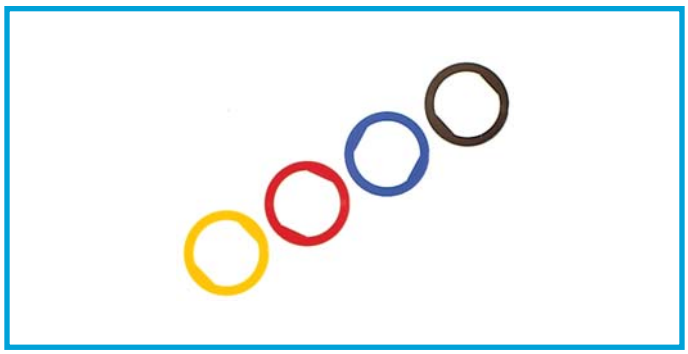

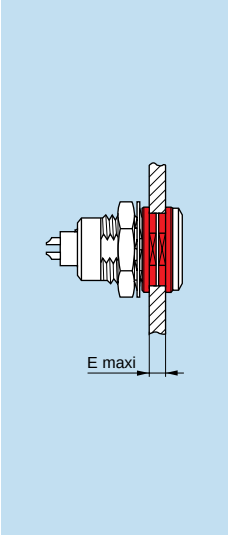

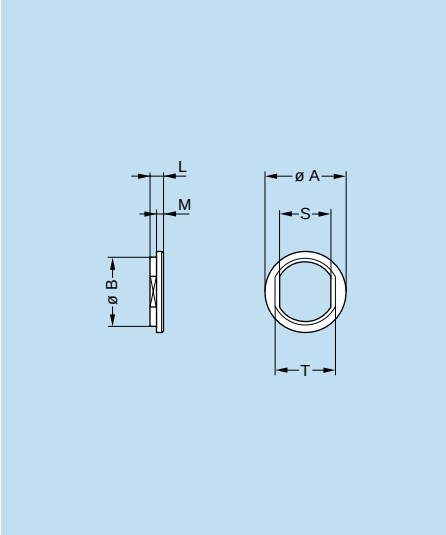

- Material: Polyamide
- Maximum operating temperature: 194° F

GRA Insulating washers

Receptacles or plugs mounted on panels can be fitted with insulating washers. The nine colors available combined with those for the overall protective coverings with bend relief makes color coding possible.

Part number	Series	Dimensions (mm)							Avail-ability
		A	B	E	L	M	S	T	
GRA.00.269.GG	00	10	8.8	4.5	1.8	1.0	6.4	8.0	●
GRA.0S.269.GG	0S-0B	12	10.8	6.0	1.8	1.0	8.3	9.9	●
GRA.1S.269.GG	1S-1B	16	13.8	6.5	1.8	1.0	10.6	12.2	●
GRA.2S.269.GG	2S-2B	21	17.8	7.3	2.2	1.2	13.6	16.2	●
GRA.3S.269.GG	3S-3B	25	21.8	10.3	2.2	1.2	16.6	20.2	●
GRA.4S.269.GG	4S-4B	32	28.8	10.5	2.5	1.5	23.7	27.2	○

Note: Insulating washers for series 5B are available on request.

Caution: These insulating washers can be used with fixed and straight receptacles with across flat dimension S1 equivalent to the S dimension of the washer.

Ref.	Color
A	blue
B	white
G	grey
J	yellow
M	brown

Ref.	Color
N	black
R	red
S	orange
V	green

Note: The last letter «G» of the part number indicates the color grey for the insulating washer. To obtain an insulating washer of another color, refer to the table above and change the letter «G» of the part number to the corresponding letter of the color required.

For the panel cut-out, please consult section«Panel cut-out» on page 150.

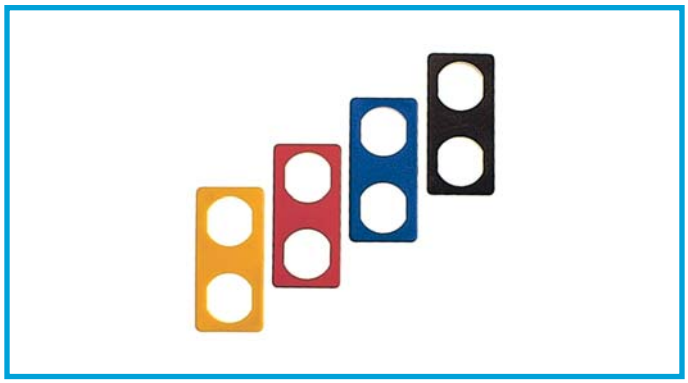

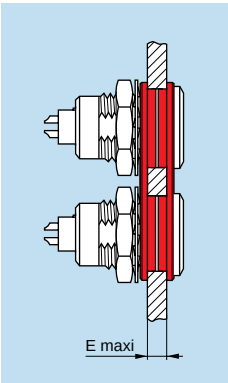

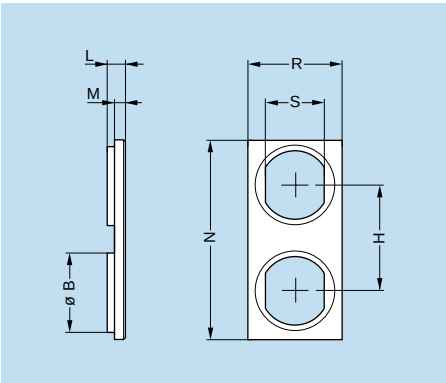

- Material: Polyamide
- Maximum operating temperature: 194° F

GRC Double panel washers

Double panel washers have been designed to make the drilling of panel holes easier for mounting fixed and straight receptacles. The combination of the nine different colors of the double panel washers and of the overall protective coverings with bend relief makes color coding possible.

Part number	Series	Dimensions (mm)								Avail-ability
		B	E	H	L	M	N	R	S	
GRC.0S.260.HG	0S-0B	10.9	5	14	2.5	1.5	26.5	12.5	8.3	○
GRC.1B.260.HG	1S-1B	13.9	5	20	3.3	1.8	34.5	14.5	10.6	○

Caution: These double panel washers can be used with fixed or free receptacles with across flat dimension S1 equivalent to the S dimension of the washer.

Ref.	Color
A	blue
B	white
G	grey
J	yellow
M	brown

Ref.	Color
N	black
R	red
S	orange
V	green

Note: The last letter «G» of the washer's part number indicates the color grey. For other colors, refer to the above table and replace letter «G» by the one corresponding to the color required.

For the panel cut-out, please consult chapter «Panel cut-out» on page 150.

● Standard, typically 0-6 weeks delivery for quantities of 250 or less.
○ Non-standard product, contact LEMO USA, typically 6-12 weeks delivery for quantities of 250 or less.
Non-standard product is defined as any product which contains one or more components which are not standard.

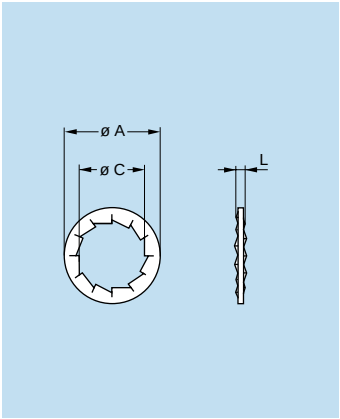

GBA Locking washers

Part number	Series	Dimensions (mm)			Availability
		A	C	L	
GBA.00.250.FN	00	9.5	7.1	1.0	●
GBA.0S.250.FN	0S-0B	12.5	9.1	1.0	●
GBA.1S.250.FN	1S-1B	16.0	12.1	1.0	●
GBA.2S.250.FN	2S-2B 2C-2G	19.5	15.1	1.2	●
GBA.3S.250.FN	3S-3B	25.0	18.1	1.4	●
GBA.4S.250.FN	4S-4B	32.0	25.1	1.4	○

● Material: Nickel-plated bronze (3 µm)

Note: To order this accessory separately, use the above part numbers.

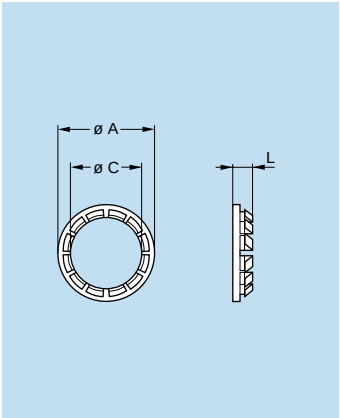

GBB Tapered washers

Part number	Series	Dimensions (mm)			Availability
		A	C	L	
GBB.00.250.LN	00	9	7.1	2.0	○
GBB.0S.250.LN	0S-0B	11	9.1	2.5	○
GBB.1S.250.LN	1S-1B	15	12.1	3.5	○
GBB.2S.250.LN	2S-2B 2C-2G	18	15.1	4.0	○
GBB.3S.250.LN	3S-3B	22	18.1	4.5	○
GBB.4S.250.LN	4S-4B	28	25.2	5.0	○
GBB.5S.250.LN	5S-5B	40	35.2	7.5	○

● Material: Nickel-plated brass (3 µm)

Note: Receptacles of series 5B and 5S are always supplied with a tapered washer. To order this accessory separately, use the above part numbers.

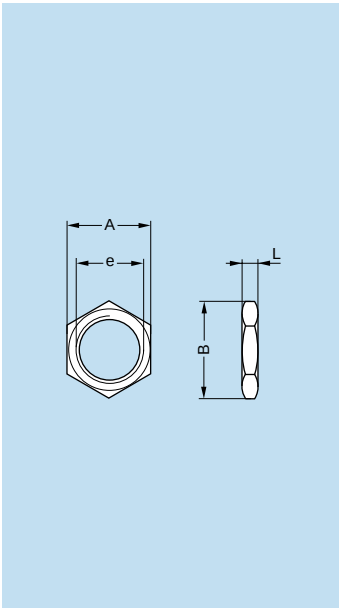

GEA Hexagonal nuts

Part number	Series	Dimensions (mm)				Availa-bility
		A	B	e	L	
GEA.00.240.LN	00	9	10.2	M7 x 0.50	2.0	●
GEA.0S.240.LN	0S-0B	11	12.4	M 9 x 0.60	2.0	●
GEA.0S.241.LN	0S-0B	12	13.8	M10 x 0.75	2.5	●
GEA.0E.240.LN	1S-1B	17	19.2	M14 x 1.00	2.5	●
GEA.1S.240.LN	1S-1B	14	15.8	M12 x 1.00	2.5	●
GEA.1E.240.LN	2S-2B	19	21.5	M16 x 1.00	3.0	●
GEA.2S.240.LN	2S-2B	17	19.2	M15 x 1.00	2.7	●
GEA.3S.240.LN	3S-3B	22	25.0	M18 x 1.00	3.0	●
GEA.4S.240.LN	4S-4B	30	34.0	M25 x 1.00	5.0	○

● Material:
– Nickel-plated brass (3 µm)
– Natural anodized aluminium alloy
– Stainless steel

Note: To order this part separately, use the above part numbers. The last letters «LN» of the part number refer to the nut material and treatment. If a nut in aluminium alloy or stainless steel is desired, replace the last letters of the part number by «PT» or «AZ» respectively.

● Standard, typically 0-6 weeks delivery for quantities of 250 or less.
○ Non-standard product, contact LEMO USA, typically 6-12 weeks delivery for quantities of 250 or less.
Non-standard product is defined as any product which contains one or more components which are not standard.

Model 1

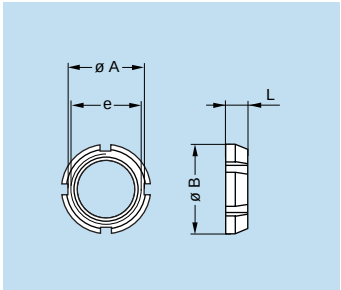

Model 2

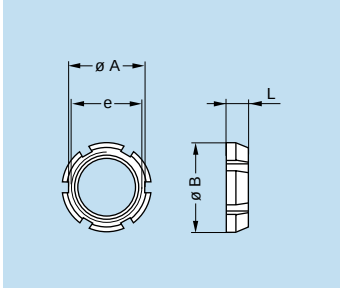

GEG Notched nut

Part number	Model	Dimensions (mm)				Avail-ability
		A	B	e	L	
GEG.00 240.LC	1	8.7	10	M7 x 0.5	2.5	○
GEG.0S.240.LC	1	10.5	12	M9 x 0.6	2.5	●
GEG.1S.240.LC	1	14.0	16	M12 x 1.0	3.5	●
GEG.1S.242.LC	1	12.1	14	M11 x 0.5	3.5	○
GEG.2S.240.LC	2	17.5	20	M15 x 1.0	3.5	●
GEG.2S.241.LC	2	20.5	24	M19 x 1.0	3.5	○

● Material: Chrome-plated brass (Ni 3 µm + Cr 0.3 µm)

Note: 00, 0B, 0S, 1B, 1S, 2B and 2S series fixed and free receptacles for back panel mounting are always delivered with this notched nut. To order this accessory separately, use the above part numbers.

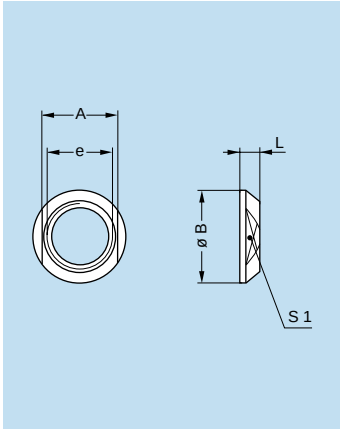

● Material: Chrome-plated brass (Ni 3 µm + Cr 0.3 µm)

Note: 3B, 3S, 4B, 4S, 5B, 5S, and 6S series fixed and free receptacles for back panel mounting are always delivered with a conical nut. To order this accessory separately, use the part numbers in the adjacent table.

GEC Conical nuts

Part number	Dimensions (mm)					Avai-lability
	A	B	e	L	S1	
GEC.00 240.LC	8	10.0	M7 x 0.5	2.5	8	○
GEC.0S.240.LC	10	12.0	M9 x 0.6	2.5	10	○
GEC.1S.240.LC	13	16.0	M12 x 1.0	3.2	13	○
GEC.1S.241.LC	17	20.0	M16 x 1.0	4.0	17	○
GEC.1S.242.LC	12	14.0	M11 x 0.5	3.2	12	○
GEC.2S.240.LC	17	20.0	M15 x 1.0	3.8	17	○
GEC.2S.241.LC	20	24.0	M19 x 1.0	5.8	20	○
GEC.3S.240.LC	20	24.0	M18 x 1.0	4.5	20	○
GEC.4S.240.LC	27	30.0	M25 x 1.0	4.5	27	○
GEC.5S.240.LC	37	41.0	M35 x 1.0	5.0	37	○

Model 1

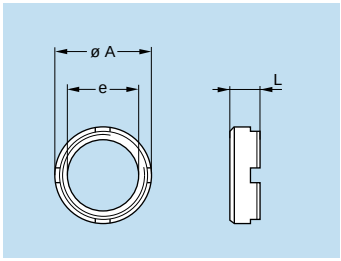

Model 2

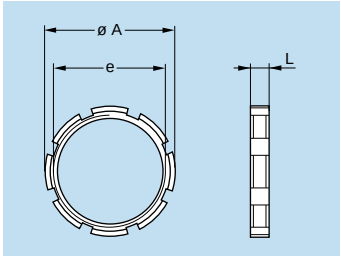

● Material: Nickel-plated brass (3 µm)

GEB Round nuts

Part number	Model	Dimensions (mm)			Availability
		A	e	L	
GEB.00.240.LN	1	9.0	M7 x 0.50	4.0	●
GEB.0S.240.LN	1	11.0	M9 x 0.60	4.0	●
GEB.0E.240.LN	1	18.0	M14 x 1.00	5.0	○
GEB.1S.240.LN	1	14.0	M12 x 1.00	5.0	●
GEB.1E.240.LN	1	20.0	M16 x 1.00	5.0	○
GEB.2S.240.LN	1	18.0	M15 x 1.00	5.5	○
GEB.2B.240.LN	2	17.5	M15 x 0.75	2.5	○
GEB.3S.240.LN	1	22.0	M18 x 1.00	5.5	○
GEB.4S.240.LN	1	28.0	M25 x 1.00	6.0	○
GEB.5S.240.LN	2	40.0	M35 x 1.00	8.0	○
GEB.5E.240.LN	2	54.0	M45 x 1.50	8.0	○
GEB.6S.241.LN	2	54.0	M48 x 1.50	8.0	○
GEB.6E.240.LN	2	65.0	M55 x 2.00	9.0	○

Note: 5B, 5S, and 6S series receptacles are always supplied with model 2 round nuts. To order this accessory separately, use the part numbers in the above table.

Data Subject to Change

● Standard, typically 0-6 weeks delivery for quantities of 250 or less.
○ Non-standard product, contact LEMO USA, typically 6-12 weeks delivery for quantities of 250 or less.
Non-standard product is defined as any product which contains one or more components which are not standard.

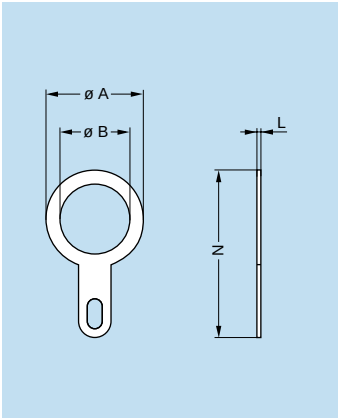

GCA Grounding lug

Part number	Series	Dimensions (mm)				Availability
		A	B	L	N	
GCA.00.255.LT	00	9.5	7.1	0.4	18.2	●
GCA.0S.255.LT	0S-0B	13.0	9.1	0.4	22.0	●
GCA.1S.255.LT	1S-1B	17	12.2	0.5	27.5	●
GCA.2S.255.LT	2S-2B	20	15.2	0.5	32.0	●
GCA.3S.255.LT	3S-3B	25	18.2	0.5	39.0	●
GCA.4S.255.LT	4S-4B	35	25.6	0.6	50.0	○
GCA.5S.255.LT	5S-5B	42	35.1	0.7	57.5	○

● Material: CuSnZn plated brass (2 µm)

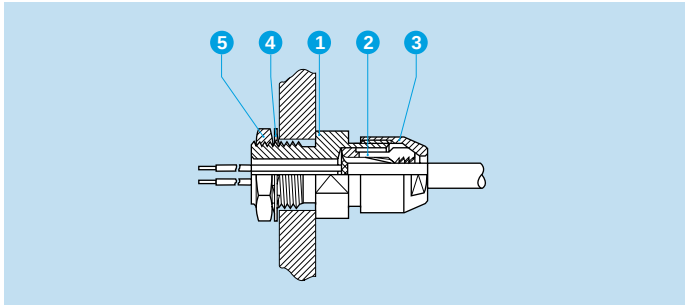

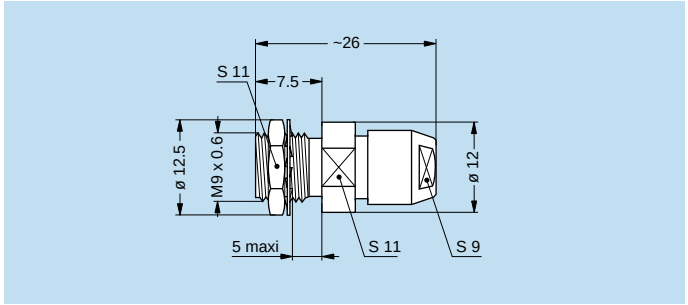

GSC Lead-through with cable collet

Part number	Cable ø (mm)		Availability
	max.	min.	
GSC.1S.290.ND42	4.0	3.1	○
GSC.1S.290.ND52	5.0	4.1	○
GSC.1S.290.ND62	6.0	5.1	○
GSC.1S.290.ND72	7.0	6.1	○
GSC.1S.290.ND76	7.5	7.1	○

Note:
The cable collet system stands for both screened and unscreened cables. It can be delivered with a nut for fitting a bend relief if you add a «Z» at the end of the part number.

● Standard, typically 0-6 weeks delivery for quantities of 250 or less.
○ Non-standard product, contact LEMO USA, typically 6-12 weeks delivery for quantities of 250 or less.
Non-standard product is defined as any product which contains one or more components which are not standard.

Tooling

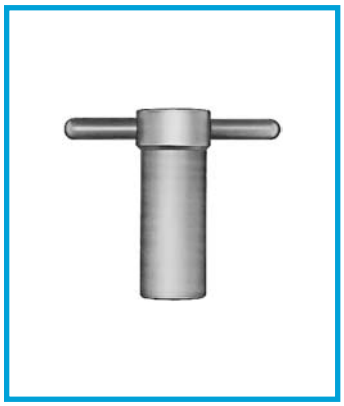

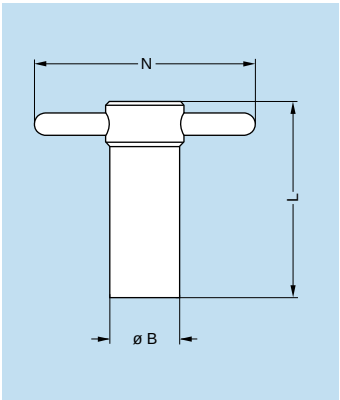

DCG Wrench for hexagonal nuts

Part number	Dimensions (mm)			Part number of the nut
	B	L	N	
DCG.91.149.0TN	14	40	50	GEA.00.240.LN
DCG.91.161.1TN	16	45	52	GEA.0S.240.LN
DCG.91.201.4TN	20	52	65	GEA.1S.240.LN
DCG.91.231.7TN	23	62	68	GEA.2S.240.LN
DCG.91.282.2TN	28	76	73	GEA.3S.240.LN

- Material: blackened steel

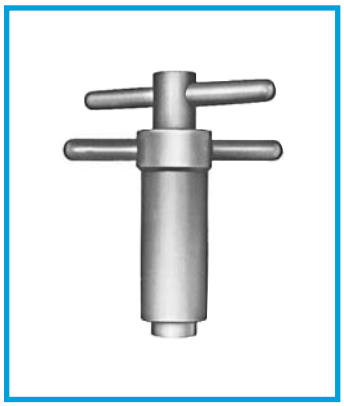

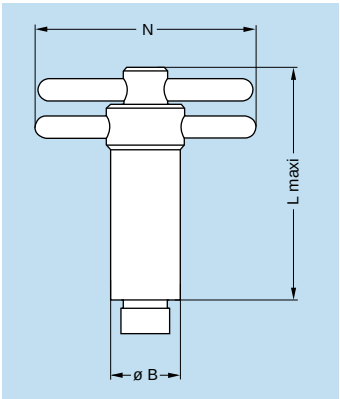

DCA Wrench for hexagonal nuts, with alignment of the receptacles by the flats

Part number	Dimensions (mm)			Part number of the nut
	B	L	N	
DCA.91.149.0TN	14	65	50	GEA.00.240.LN
DCA.91.161.1TN	16	73	52	GEA.0S.240.LN
DCA.91.201.4TN	20	85	65	GEA.1S.240.LN
DCA.91.231.7TN	23	100	68	GEA.2S.240.LN
DCA.91.282.2TN	28	120	73	GEA.3S.240.LN

- Material: blackened steel

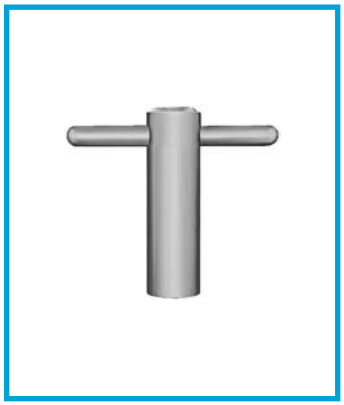

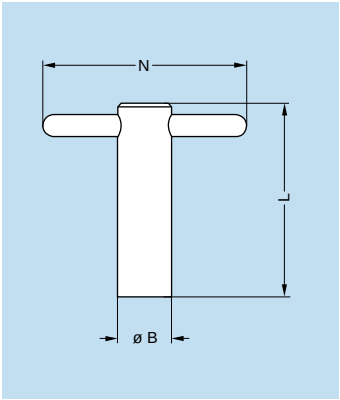

DCB Spanner type wrench for model 1 round nuts

Part number	Dimensions (mm)			Part number of the nut
	B	L	N	
DCB.91.119.0TN	11	40	50	GEB.00.240.LN
DCB.91.131.1TN	13	45	50	GEB.0S.240.LN
DCB.91.161.4TN	16	52	65	GEB.1S.240.LN
DCB.91.201.8TN	20	62	65	GEB.2S.240.LN
DCB.91.242.2TN	24	76	70	GEB.3S.240.LN

- Material: blackened steel

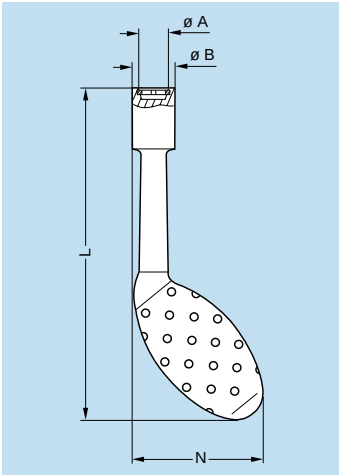

DCH Wrench for conical nut

Part number	Dimensions (mm)				Part number of the nut
	A	B	L	N	
DCH.91.101.PA	10.1	12.8	124	48.3	GEC.00.240.LC
DCH.91.121.PA	12.1	14.8	124	49.3	GEC.0S.240.LC
DCH.91.161.PA	16.1	21.0	124	51.9	GEC.1S.240.LC
DCH.91.201.PA	20.1	22.8	129	53.5	GEC.2S.240.LC

- Material: Dark grey polyurethane

Data Subject to Change

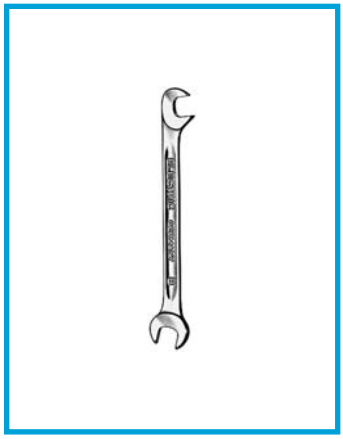

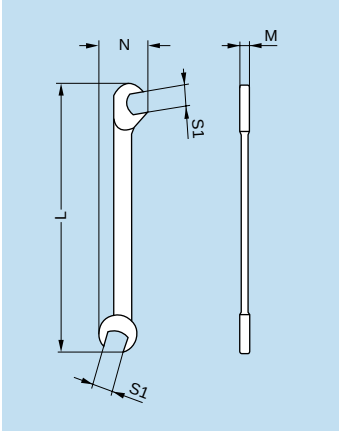

DCP Flat wrench for collet nut

Part number	Dimensions (mm)			
	L	M	N	S1
DCP.99.045.TC	70	2	10.5	4.5
DCP.99.050.TC	78	2	12.6	5.0
DCP.99.055.TC	78	2	12.6	5.5
DCP.99.060.TC	78	2	12.6	6.0

- Material: chrome-plated steel

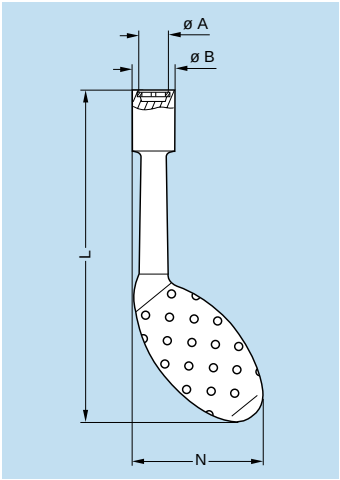

DCH Wrench for notched nuts

Part number	Dimensions (mm)				Part number of the nut
	A	B	L	N	
DCH.91.101.PA	10.1	12.8	124	48.3	GEG.00.240.LC
DCH.91.121.PA	12.1	14.8	124	49.3	GEG.0S.240.LC
DCH.91.181.PA	18.1	22.8	129	53.1	GEG.0E.240.LC
DCH.91.161.PA	16.1	21.0	124	51.2	GEG.1S.240.LC
DCH.91.201.PA	20.1	22.8	129	53.5	GEG.1E.240.LC
DCH.91.141.PA	14.1	18.6	124	51.2	GEG.1S.242.LC
DCH.91.201.PA	20.1	22.8	129	53.5	GEG.2S.240.LC
DCH.91.241.PA	24.1	30.8	134	52.6	GEG.2S.241.LC
DCH.91.251.PA	25.1	32.8	134	55.5	GEG.2E.240.LC

- Material: Blue polyurethane

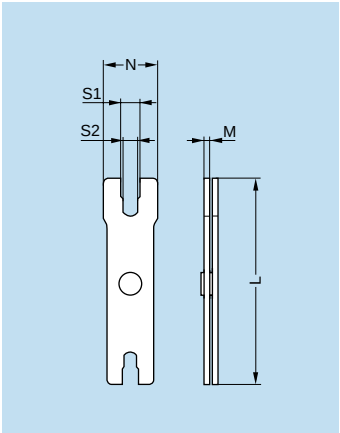

DCP Wrench for tightening backnut

Part number	Series	Dimensions (mm)				
		L	M	N	S1	S2
DCP.91.001.TN	0B	95	2.5	21	8.1	7.1
	1B	95	2.5	25	10.1	9.1
DCP.91.023.TN	2B	115	3.0	30	13.1	12.1
	3B	115	3.0	35	15.1	14.1
DCP.91.045.TN	4B	130	3.5	40	21.2	20.2
	5B	130	3.5	45	31.2	30.2

- Material: blackened steel

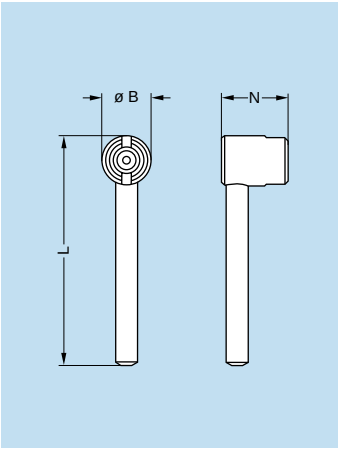

DCL Wrench whish secures straight plug with two latching tabs while tightening collet nut

Part number	Series	Dimensions (mm)		
		B	L	N
DCL.91.105.0TK	00	10	45	13.5
DCL.91.127.0TK	0S	12	47	17.0
DCL.91.149.0TK	1S	14	52	19.0

- Material: blackened steel

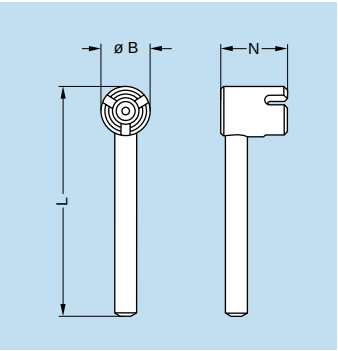

DCN Wrench which secures straight plug with three latching tabs while tightening collet nut

Part number	Series	Dimensions (mm)		
		B	L	N
DCN.91.905.0TK	00	9	42	12
DCN.91.125.0TK	0S	12	47	17
DCN.91.149.0TK	1S	14	53	19
DCN.91.171.2TK	2S-2C	17	63	20
DCN.91.201.5TK	3S	20	74	22

- Material: blackened steel

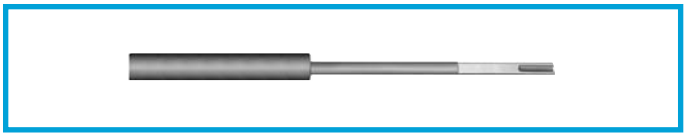

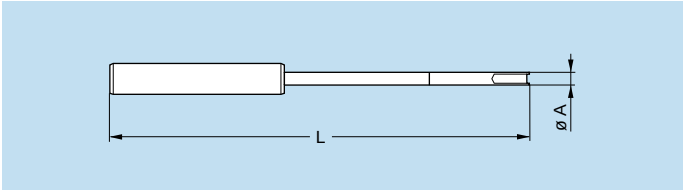

DCL Assembly tool for FVB.00.303.NLA plugs

Part number	Series	Dim. (mm)	
		A	L
DCL.91.516.5TK	00	5	165

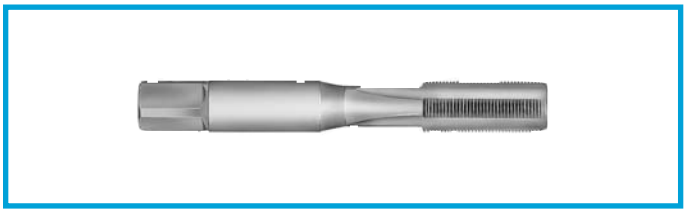

DTA Taps

Part number	Series	Thread
DTA.99.700.5Z	00	M7 x 0.5
DTA.99.900.6Z	0S-0B	M9 x 0.6

Crimp Tooling for Crimp contacts

Fig. 1

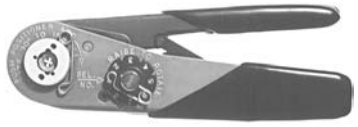

Fig. 2

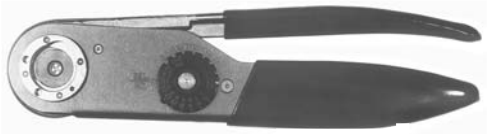

Manual crimping tools

Supplier	Part number		
	contact ø 0.5-0.7 0.9-1.3 (Fig. 1)	contact ø 1.6-2.0 (Fig. 2)	contact ø 3.0-4.0 (Fig. 2)
LEMO	DPC.91.701.V[1)]	DPC.91.101.A[2)]	DPC.91.102.V
DANIELS	MH860[1)]	AF8[2)]	M300BT
BALMAR	23-000	55-000	55-000
BUCHANAN	616336[1)]	615708[2)]	615708

[1)] According to specification MIL-C-22520/7-01.
[2)] According to specification MIL-C-22520/1-01.

Pneumatic crimping tools

Supplier	Part number
LEMO	DPC.91.701.C
BALMAR	85230
BUCHANAN	621101

According to specification MIL-C-22520/7-01.
For LEMO contacts ø 0.5-0.7-0.9-1.3 mm

male

female

These positioners are suitable for use with both manual and pneumatic crimping tools according to the MIL-C-22520/7-01 standard.

Fig. 1

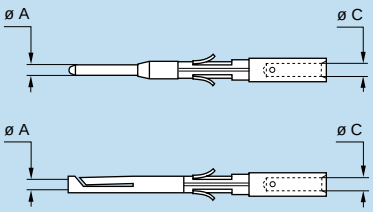

Fig. 2

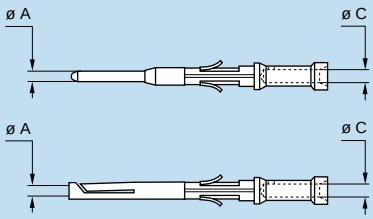

Note: A wide variation of strand number and diameter combinations are quoted as being AWG, some of which do not have a large enough cross section to guarantee a crimp as per either MIL-C-22520/1-01 or /7-01. Our technical department is at your disposal to study and propose a solution to all your applications.

DCE Positioners for crimp contacts ø 0.5-0.7-0.9 and 1.3 mm

	Connector + Contact					Positioners part number	
	Type	ø A	ø C	Fig.	Conductor AWG	For male contact	For female contact
00	302 303 304	0.5	0.45	1	28-30-32	DCE.91.050.0VC	DCE.91.050.0VM
0B 0S	302[1)] 303	0.9	1.10	1	20-22-24	DCE.91.090.BVC	DCE.91.090.BVM
		0.9	0.80	2	22-24-26		
		0.9	0.45	2	28-30-32	DCE.91.090.AVC	DCE.91.090.AVM
	304/305	0.7	0.80	1	22-24-26	DCE.91.070.BVC	DCE.91.070.BVM
		0.7	0.45	2	28-30-32		
	306/307 309	0.5	0.45	1	28-30-32	DCE.91.050.BVC	DCE.91.050.BVM
1B 1S	302[1)] 303	1.3	1.40	1	18-20	DCE.91.131.BVC	DCE.91.131.BVM
		1.3	1.10	2	20-22-24		
	304[1)] 305	0.9	1.10	1	20-22-24	DCE.91.091.BVC	DCE.91.091.BVM
		0.9	0.80	2	22-24-26		
	306/307 308	0.7	0.80	1	22-24-26	DCE.91.071.BVC	DCE.91.071.BVM
		0.7	0.45	2	28-30-32		
	310/314 316	0.5	0.45	1	28-30-32	DCE.91.051.BVC	DCE.91.051.BVM
2B 2S	304/305 306[1)] 307	1.3	1.40	1	18-20	DCE.91.132.BVC	DCE.91.132.BVM
		1.3	1.10	2	20-22-24		
		1.3	0.80	2	22-24-26	DCE.91.132.CVC	DCE.91.132.CVM
	308/310	0.9	1.10	1	20-22-24	DCE.91.092.BVC	DCE.91.092.BVM
		0.9	0.80	2	22-24-26		
		0.9	0.45	2	28-30-32	DCE.91.092.AVC	DCE.91.092.AVM
	312/314 316/318 319	0.7	0.80	1	22-24-26	DCE.91.072.BVC	DCE.91.072.BVM
		0.7	0.45	2	28-30-32		
	326/332	0.5	0.45	1	28-30-32	DCE.91.052.BVC	DCE.91.052.BVM

Note: [1)] Only these types are available in S series.

male

female

These positioners are suitable for use with both manual and pneumatic crimping tools according to the MIL-C-22520/7-01 standard.

DCE Positioners for crimp contacts 0.5-0.7-0.9 and 1.3 mm diameter

	Connector + Contact					Positioners part number	
	Type	ø A	ø C	Fig.	Conductor AWG	For male contact	For female contact
3B	308/309 310	1.3	1.40	1	18-20	DCE.91.133.BVC	DCE.91.133.BVM
		1.3	1.10	2	20-22-24		
	312/314 316/318	0.9	1.10	1	20-22-24	DCE.91.093.BVC	DCE.91.093.BVM
		0.9	0.80	2	22-24-26		
	320/322 324/326 328/330	0.7	0.80	1	22-24-26	DCE.91.073.BVC	DCE.91.073.BVM
		0.7	0.45	2	28-30-32		
4B	312	1.3	1.40	1	18-20	DCE.91.134.BVC	DCE.91.134.BVM
		1.3	1.10	2	20-22-24		
	316/320 324/330	0.9	1.10	1	20-22-24	DCE.91.094.BVC	DCE.91.094.BVM
		0.9	0.80	2	22-24-26		
	340	0.7	0.80	1	22-24-26	DCE.91.074.BVC	DCE.91.074.BVM
		0.7	0.45	2	28-30-32		
5B	330/340 348	1.3	1.40	1	18-20	DCE.91.135.BVC	DCE.91.135.BVM
		1.3	1.10	2	20-22-24		
	350/354 364	0.9	1.10	1	20-22-24	DCE.91.095.BVC	DCE.91.095.BVM
		0.9	0.80	2	22-24-26		

Note: These turrets can be used with manual crimping tool according to MIL-C-22520/1-01 standard.

DCE Turret for crimp contacts 1.6-2.0-3.0 and 4.0 mm diameter

	Connector + Contact					Positioners
	Type	ø A	ø C	Fig.	Conductor AWG	Part number
2B	302	2.0	2.4	1	12-14-16	DCE.91.202.BVCM
		2.0	1.9	2	14-16-18	
	303	1.6	1.9	1	14-16-18	DCE.91.162.BVCM
		1.6	1.4	2	18-20-22	
3B	302	3.0	2.9	1	10-12-14	DCE.91.303.BVCM
	303/304 309	2.0	2.4	1	12-14-16	DCE.91.203.BVCM
		2.0	1.9	2	14-16-18	
	305/306 307	1.6	1.9	1	14-16-18	DCE.91.163.BVCM
		1.6	1.4	2	18-20-22	
4B	304	3.0	2.9	1	10-12-14	DCE.91.304.BVCM
	306/307	2.0	2.4	1	12-14-16	DCE.91.204.BVCM
		2.0	1.9	2	14-16-18	
	310	1.6	1.9	1	14-16-18	DCE.91.164.BVCM
		1.6	1.4	2	18-20-22	
5B	304	4.0	4.0	1	8-10-12	DCE.91.405.BVCM
	310	3.0	2.9	1	10-12-14	DCE.91.305.BVCM
	314/316	2.0	2.4	1	12-14-16	DCE.91.205.BVCM
		2.0	1.9	2	14-16-18	
	320	1.6	1.9	1	14-16-18	DCE.91.165.BVCM
		1.6	1.4	2	18-20-22	

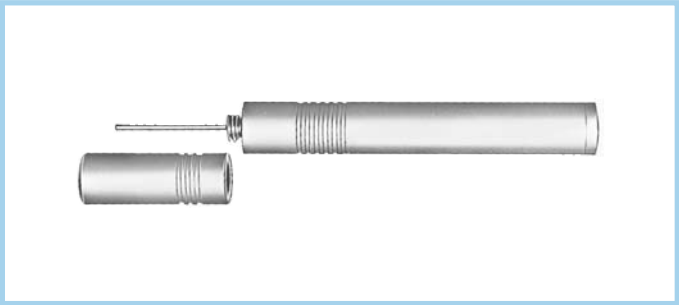

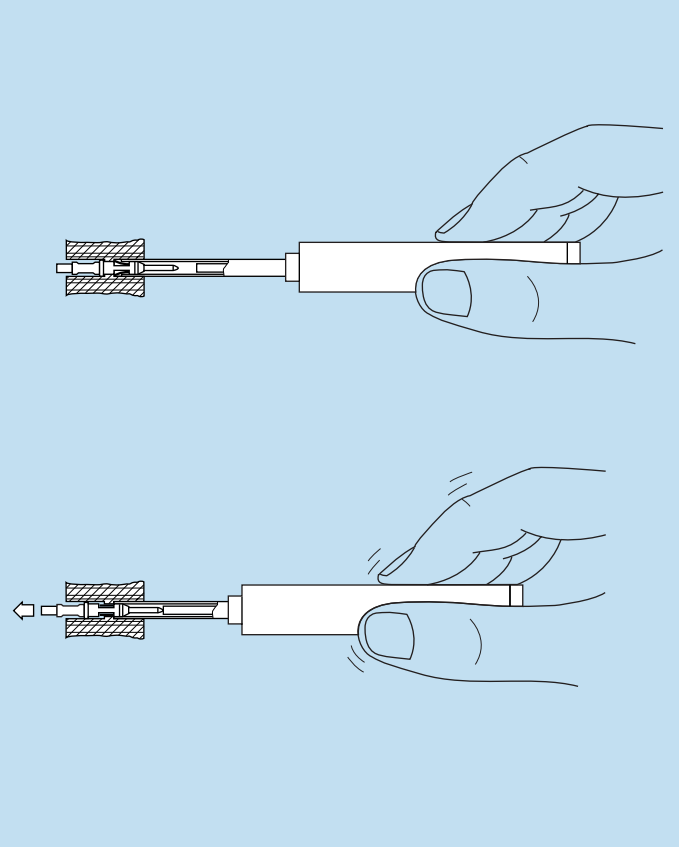

Note: This model is used for male and female contacts.

DCF Extraction tools for crimp contacts

	Connector		Extractors
	Type	Contact ø A	Part number
00	302/303/304	0.5	DCF.91.050.2LT
0B	302/303	0.9	DCF.91.090.2LT
	304/305	0.7	DCF.91.070.2LT
	306/307/309	0.5	DCF.91.050.2LT
1B	302/303	1.3	DCF.91.131.2LT
	304/305	0.9	DCF.91.090.2LT
	306/307/308	0.7	DCF.91.070.2LT
	310/314/316	0.5	DCF.91.050.2LT
2B	302	2.0	DCF.91.202.2LT
	303	1.6	DCF.91.162.2LT
	304/305/306/307	1.3	DCF.91.131.2LT
	308/310	0.9	DCF.91.090.2LT
	312/314/316/318/319	0.7	DCF.91.070.2LT
	326/332	0.5	DCF.91.050.2LT
3B	302	3.0	DCF.91.303.5LT
	303/304/309	2.0	DCF.91.203.5LT
	305/306/307	1.6	DCF.91.163.5LT
	308/309/310	1.3	DCF.91.133.5LT
	312/314/316/318	0.9	DCF.91.093.5LT
	320/322/324/326/330	0.7	DCF.91.073.5LT
4B	304	3.0	DCF.91.303.5LT
	306/307	2.0	DCF.91.203.5LT
	310	1.6	DCF.91.163.5LT
	312	1.3	DCF.91.133.5LT
	316/320/324/330	0.9	DCF.91.093.5LT
	340	0.7	DCF.91.073.5LT
5B	304	4.0	DCF.91.405.5LT
	310	3.0	DCF.91.303.5LT
	314/316	2.0	DCF.91.203.5LT
	320	1.6	DCF.91.163.5LT
	330/340/348	1.3	DCF.91.133.5LT
	350/354/364	0.9	DCF.91.093.5LT

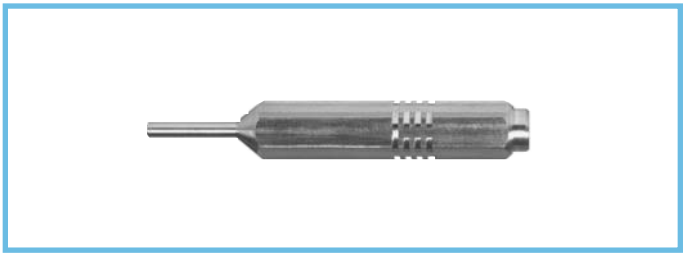

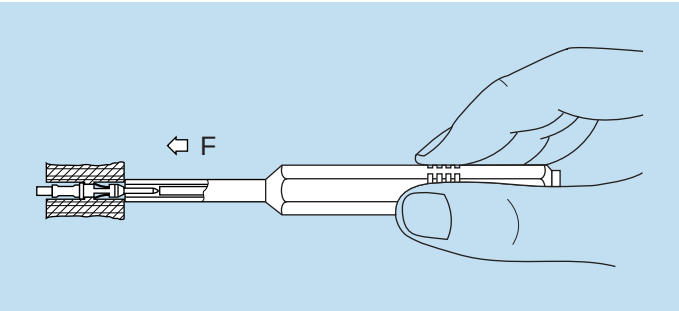

DCK Retention testing tools for crimp contacts 0.5-0.7-0.9 and 1.3 mm diameter

Contact ø A	Test force (N)	Testing tool part number	
		For male contact	For female contact
0.5	8	DCK.91.050.8LRC	DCK.91.050.8LRM
0.7	14	DCK.91.071.4LRC	DCK.91.071.4LRM
0.9	14	DCK.91.091.4LRC	DCK.91.091.4LRM
1.3	25	DCK.91.132.5LRC	DCK.91.132.5LRM

Panel Cut-Outs

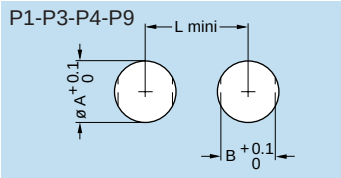

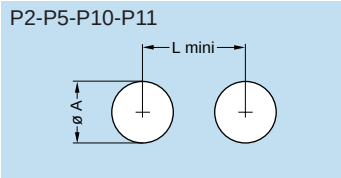

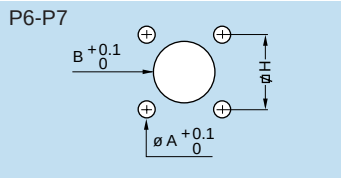

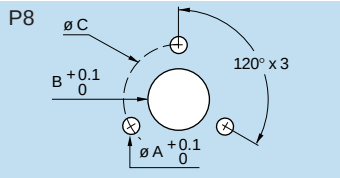

B series

Series	P1			P2		P3			P4			P5		P6			P8			P9			P10	
	ø A	B	L	ø A	L	ø A	B	L	ø A	B	L	ø A[2]	L	ø A	B	H	ø A	B	C	ø A	B	L	ø A	L
00	7.1	6.4	12.5	7.1	11.5	–	–	–	–	–	–	–	–	–	–	–	–	–	–	7.1	–	12	–	–
0B	9.1	8.3	14.5	9.1	13.5	14.1	12.6	20.1	10.1	9.1	15.0	8.30	10.5	–	–	–	–	–	–	9.1	8.3	15	–	–
1B	12.1	10.6	18.5	–	–	16.1	14.6	22	14.1	12.6	21.0	11.17	14.0	–	–	–	–	–	–	12.1	10.6	19	11.1	17
2B	15.1	13.6	22.5	–	–	19.2	17.1	28	16.1	15.1	23.0	13.95	18.0	–	–	–	–	–	–	15.1	13.6	23	–	–
3B	18.2	16.6	27.0	–	–	–	–	–	20.2	18.6	29.5	–	–	–	–	–	–	–	–	18.2	16.6	27	–	–
4B	25.2	23.6	36.0	–	–	–	–	–	25.2	23.6	36.1	–	–	–	–	–	–	–	–	25.2	23.6	36	–	–
5B	35.2[1]	33.6	44.0	–	–	–	–	–	35.2	33.6	47.1	–	–	3.3	35.2	34	2.8	35.2	47	35.2	33.6	47	–	–

Note:
[1] For using the tapered washer a round hole ø 36 mm apply. [2] tolerance: $^{+0.02}_{0}$

Cut-out types

Model	Type	Model	Type	Model	Type	Model	Type	Model	Type
EBG	P6	EKG	P1	FAG	P1	HMG	P9	XBG	P2
ECG	P1	EMG	P1	FBG	P8	HNG	P9	XPF	P2
EEG	P1	ENG	P1	FWG	P9	PEG	P1	XRB	P2
EGG	P1	ENY	P1	HCG	P3	PFG	P1	YHG	P9
EFG	P2	ESG	P1/P2	HEG	P9	PKG	P1		
EHG	P1	EXG	P2/P10	HGG	P9	R●●	P4		
EJG	P5	EYG	P1/P10	HHG	P9	S●●	P4/P9[3]		

Note: [3] In series 1B use P9.

Mounting nut torque

Series	Torque (Nm)	
	Metal shell	Plastic shell[4]
00	1.0	0.4
0B	2.5	0.4
1B	4.5	0.7
2B	6.0	0.8
3B	9.0	1.0
4B	12.0	5.0
5B	17.0	–

Note: [4] These values apply when metal shell are mounted with insulating washer.

S series

Series	P1			P2		P3			P4			P5		P6			P7			P10		P11	
	ø A	B	L	ø A	L	ø A	B	L	ø A	B	L	ø A[2]	L	ø A	B	H	ø A	B	H	ø A	L	ø A	L
00	7.1	6.4	12.5	7.1	11.5	–	–	–	–	–	–	–	–	–	–	–	–	–	–	–	–	–	–
0S	9.1	8.3	14.5	9.1	13.5	12.1	10.6	20.0	10.1	9.1	15	–	–	–	–	–	–	–	–	–	–	9.1	16
1S	12.1	10.6	18.5	12.1	19.0	14.1	12.6	21.0	12.1	10.6	18	11.92	15.5	3.3	12.1	12.7	2.7	11.1	12.4	11.1	17	12.1	19
2S	15.1	13.6	22.5	15.1	21.5	16.1	14.6	22.0	16.1	15.1	23	–	–	3.3	15.1	15.5	–	–	–	–	–	–	–
3S	18.2	16.6	27.0	18.2	27.0	20.2	18.6	30.0	20.2	18.6	29	–	–	3.3	18.2	18.0	–	–	–	–	–	–	–
4S	25.2	23.6	36.0	25.2	34.0	25.2	23.6	36.0	25.2	23.6	36	–	–	–	–	–	–	–	–	–	–	–	–
5S	35.2[1]	33.6	44.0	35.2	44.0	35.2	33.6	47.0	35.2	33.6	47	–	–	4.4	35.2	36.8	–	–	–	–	–	–	–
6S	48.3	45.6	58.0	48.3	58.0	48.3	45.6	60.0	48.3	45.6	60	–	–	–	–	–	–	–	–	–	–	–	–

Note:
[1] For using the tapered washer a round hole ø 36 mm apply. [2] tolerance: $^{+0.02}_{0}$

Cut-out types

Model	Type	Model	Type	Model	Type	Model	Type	Model	Type
EBC	P6	EMD	P1	ERS	P2	FAA	P1/P2[3]	PSS	P1
EBD	P6	ERA	P1	ERT	P5	HCP	P3[4]	RAD	P1/P2[5]
EBS	P7	ERC	P1	ERY	P1	HGP	P3	SWH	P4
ECP	P1	ERD	P1	ERZ	P1	HGW	P11		
EEP	P1	ERM	P1	EXP	P2/P10	PSA	P1		
EHP	P2/P1	ERN	P1	EWB	P3	PSP	P1		

1 N = 0.102 kg

Note: [3] In series 6S use P2. [4] Use only ø A in 1S series.
[5] In series 4S and 5S use P2.

Mounting nut torque

Series	Torque (Nm)	
	Metal shell	Plastic shell[6]
0S	2.5	0.4
1S	4.5	0.7
2S	6.0	0.8
3S	9.0	1.0
4S	12.0	5.0
5S	17.0	–
6S	22.0	–

Note: [6] These values apply when metal shell are mounted with insulating washer.

Data Subject to Change

Panel cut-out for mounting with insulating washer or double panel washer (B-S series)

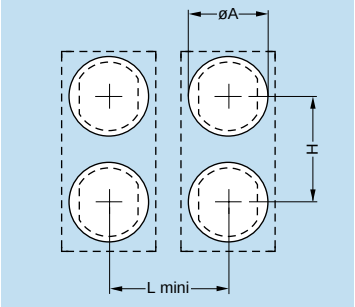

Series	Dimensions (mm)		
	ø A	H	L
0S-0B	11	14	13.5
1S-1B	14	20	17.0

PCB Drilling Patterns

Fixed receptacle with straight printed circuit contact (B series)

P15

302

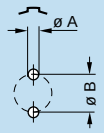

Series	Dimensions	
	A	B
00	0.6	1.2
0B	0.8	2.2
1B	0.8	2.8
2B	0.8	4.4

303

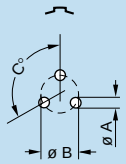

Series	Dimensions		
	A	B	C
00	0.6	1.35	120°
0B	0.8	2.30	120°
1B	0.8	3.00	120°
2B	0.8	4.60	120°
3B	0.8	5.60	120°

304

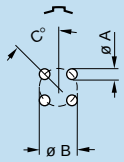

Series	Dimensions		
	A	B	C
00	0.6	1.6	45°
0B	0.6	2.5	45°
1B	0.8	3.1	45°
2B	0.8	5.0	45°
3B	0.8	6.2	45°

305

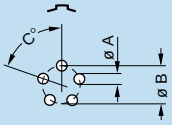

Series	Dimensions		
	A	B	C
0B	0.6	2.8	72°
1B	0.8	3.4	72°
2B	0.8	5.2	72°

306

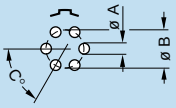

Series	Dimensions		
	A	B	C
0B	0.6	3.0	60°
1B	0.8	3.7	60°

306

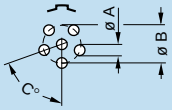

Series	Dimensions		
	A	B	C
2B	0.8	5.6	72°

307

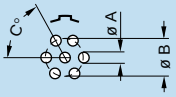

Series	Dimensions		
	A	B	C
0B	0.6	3.0	60°
1B	0.8	3.7	60°
2B	0.8	5.8	60°

308

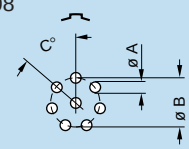

Series	Dimensions		
	A	B	C
1B	0.8	3.8	51°26'

308

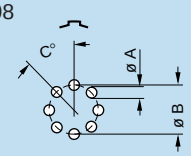

Series	Dimensions		
	A	B	C
2B	0.8	6.4	45°
3B	0.8	7.5	45°

309

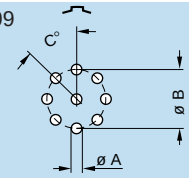

Series	Dimensions		
	A	B	C
3B	0.8	7.5	45°

310

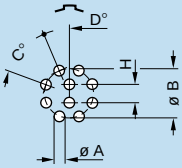

Series	Dimensions				
	A	B	C	D	H
1B	0.6	3.95	45°	22°30'	1.40
2B	0.8	6.20	45°	22°30'	2.15
3B	0.8	7.90	45°	22°30'	2.80

312

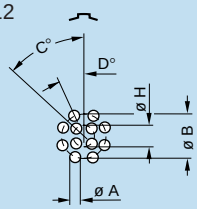

Series	Dimensions				
	A	B	C	D	H
2B	0.8	6.50	45°	22°30'	2.80
3B	0.8	8.20	45°	22°30'	3.40

314

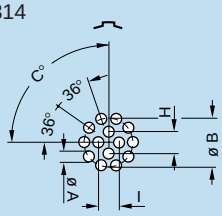

Series	Dimensions				
	A	B	C	H	I
1B	0.6	4.4	90°	1.90	1.80
2B	0.8	6.5	90°	2.65	2.65
3B	0.8	8.2	90°	3.40	3.40

316

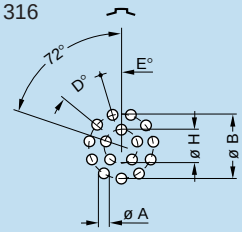

Series	Dimensions				
	A	B	D	E	H
1B	0.6	4.4	32°44'	16°22'	2.00
2B	0.8	6.6	32°44'	16°22'	3.10
3B	0.8	8.4	32°44'	16°22'	3.86
4B	0.6	10.5	32°44'	16°22'	5.00

318

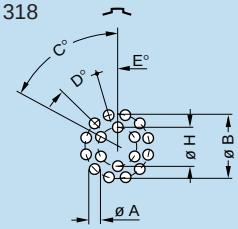

Series	Dimensions					
	A	B	C	D	E	H
2B	0.8	6.7	60°	30°	15°	3.50
3B	0.8	8.4	60°	30°	15°	4.34

319

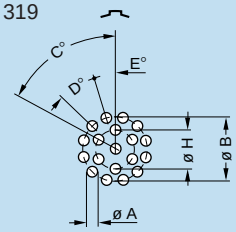

Series	Dimensions					
	A	B	C	D	E	H
2B	0.8	6.7	60°	30°	15°	3.5

Note: All views are from the side of the receptacle.

Data Subject to Change

320

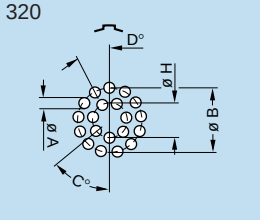

Series	Dimensions				
	A	B	C	D	H
3B	0.6	8.62	51°26'	27°42'	4.78
4B	0.6	11.00	51°26'	27°42'	6.00

322

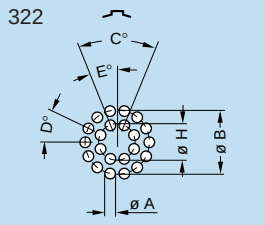

Series	Dimensions					
	A	B	C	D	E	H
3B	0.6	8.8	45°	25°43'	22°30'	5

324

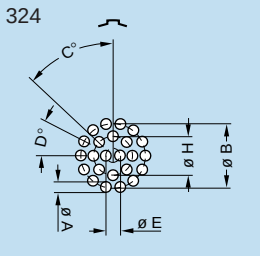

Series	Dimensions					
	A	B	C	D	E	H
3B	0.6	8.8	45°	25°43'	1.8	5.30
4B	0.6	11.1	45°	25°43'	2.2	6.65

2B.326

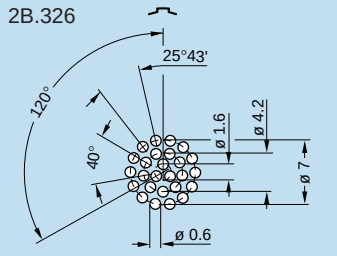

3B.326

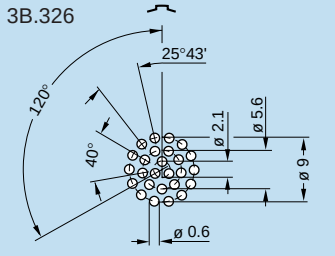

3B.330

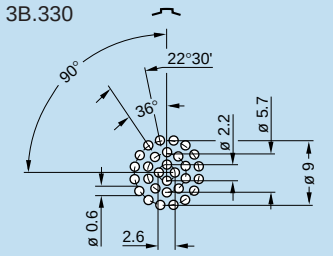

4B.330

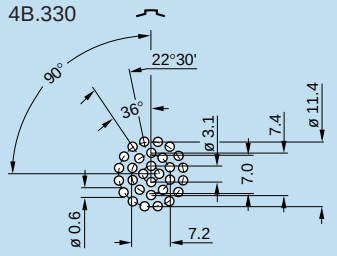

4B.340

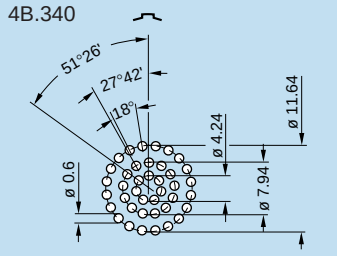

5B.350

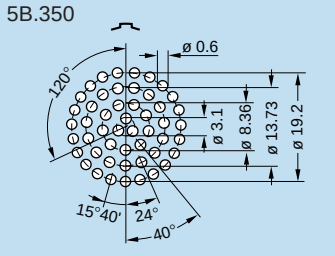

5B.354

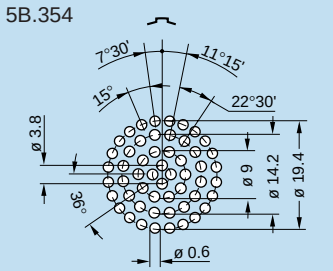

5B.364

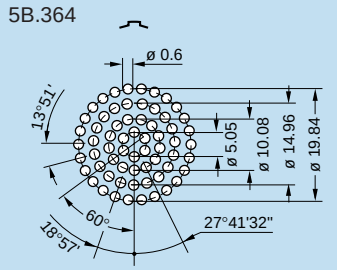

Length of straight printed circuit contacts (for receptacle E●●)

	Type	Dimensions	
		ø C	L
00	302	0.5	3.0
	303	0.5	3.0
	304	0.5	3.0
0B	302/303	0.7	3.0
	304/305	0.5	3.0
	306/307	0.5	3.0
1B	302/303/304/305	0.7	3.0
	306/307/308	0.7	3.0
	310/314/316	0.5	3.0
2B	302	0.7	3.0
	303/304/305/306/307/308/310	0.7	5.0
	312/314/316/318/319	0.7	6.0
	326	0.5	3.0
3B	303/304/308/309/310	0.7	3.0
	312/314/316/318	0.7	3.0
	320/322/324/326/328/330	0.5	4.5
4B	316/320	0.5	5.0
	324/330	0.5	5.0
	340	0.5	5.0
5B	350	0.5	5.0
	354	0.5	5.0
	364	0.5	5.0

Length of straight printed circuit contacts (for receptacle EZG/EYG/XPF)

	Type	Models			
		EZG/EYG		XPF	
		ø C	L	ø C	L
0B	302/303	0.7	4.3	–	–
	304/305	0.5	4.3	0.7	2.9
	306/307	0.5/0.8	3/4.3	–	–
1B	302/303/304/305	0.7	3.6	–	–
	306/307/308	0.7	3.6	–	–
	310/314/316	0.5	3.6	–	–
2B	303/304/305/306/307/308/310	0.7	4	–	–
	312/314/316/318/319	0.7	5	–	–

E●●

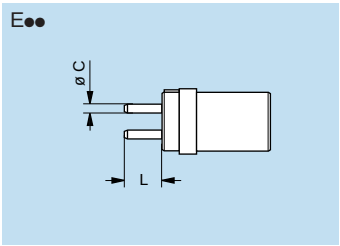

EZG/EYG/XPF

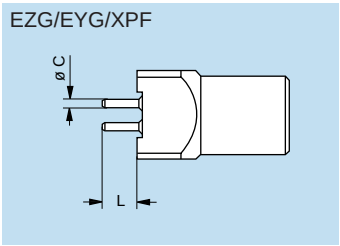

Note: This table does not apply for receptacle H●●; receptacle EH● and plug FA●.

Data Subject to Change

Fixed receptacle for printed circuit (B series)

P16

Holes for fixing the housing:

EYG-EZG

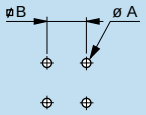

Series	Dimensions	
	A	B
00	0.8[1)]	5.08
0B	1.7[2)]	7.62
1B	1.7[2)]	7.62
2B	1.7[2)]	10.16

XPF.0B

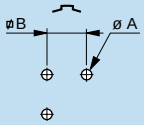

Series	Dimensions	
	A	B
0B	1.7	5.08

Note: 1) To solder. 2) To screw.

Fixed receptacle with elbow printed circuit contact (B series)

P17

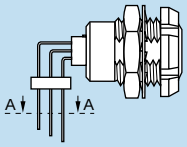

302

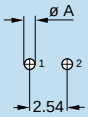

Series	Dim.
	A
0B	0.7
1B	0.9

303

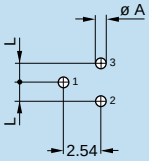

Series	Dim.	
	A	L
0B	0.7	1.27
1B	0.9	1.27
2B	0.9	2.54

304

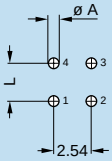

Series	Dim.	
	A	L
0B	0.7	2.54
1B	0.7	2.54
2B	0.9	3.50

0B.305

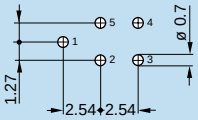

1B.305

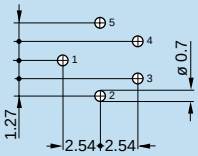

2B.305

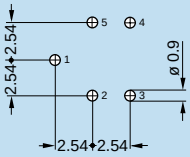

0B / 1B.306

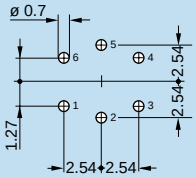

2B.306

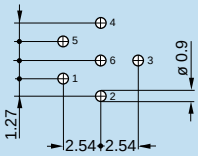

0B / 1B.307

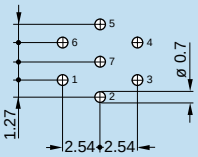

2B.307

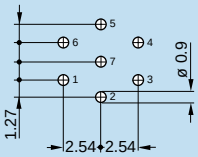

1B.308

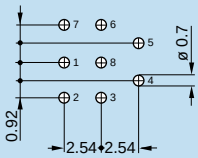

2B.308

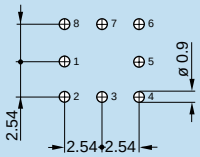

1B/ 2B.310

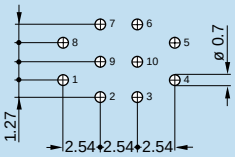

2B/ 3B.312

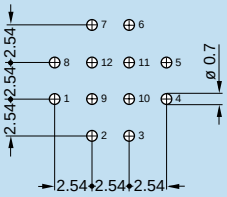

1B / 2B.314

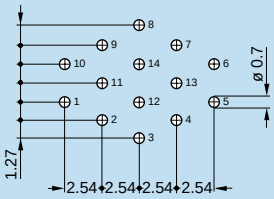

3B.314

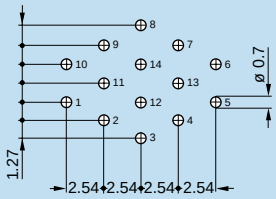

2B / 3B.316

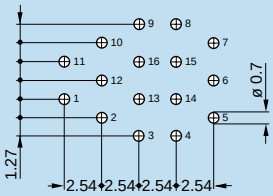

2B.318

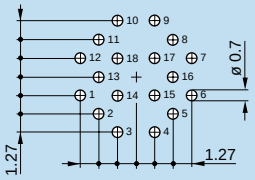

3B.318

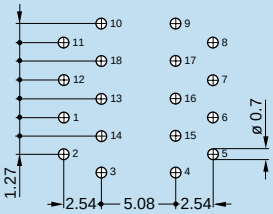

Data Subject to Change

2B.319

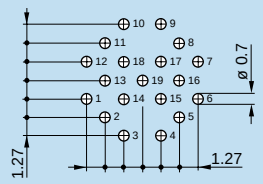

3B.320

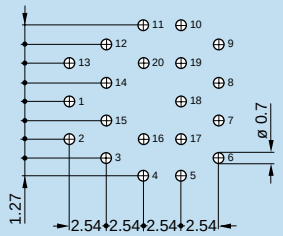

3B.324

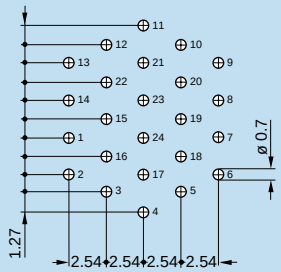

3B.330

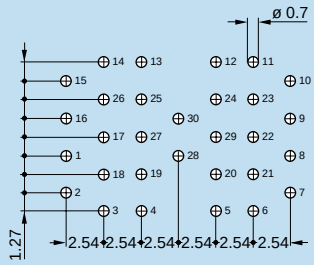

Elbow receptacle (90°) for printed circuit (B series)

P18 P19 P20

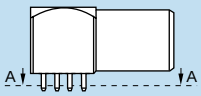

P18 - EPG.00.302 - XBG.00.302
XRB.00.302[1)]

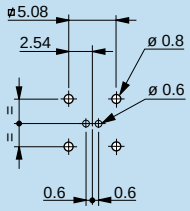

P18 - EPG.00.303 - XBG.00.303
XRB.00.303[1)]

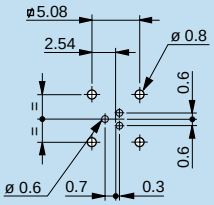

P18 - EPG.00.304 - XBG.00.304
XRB.00.304[1)]

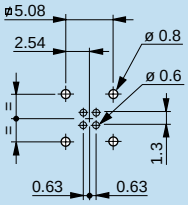

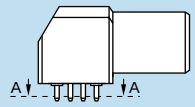

P19 - EPG-EXG
Solder mount

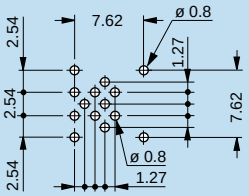

P19 - EPG-EXG
Screw mount

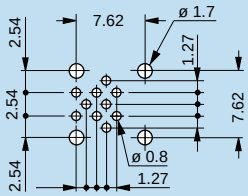

P20 - EPG.1B.314

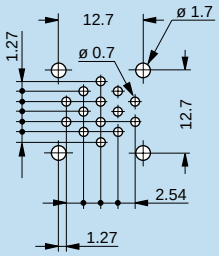

Note: [1)] For the XRB.00 series, the holes for shell fixing are different (see p. 41).

Fixed receptacle with straight printed circuit contact (S series)

P21

302

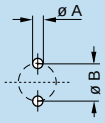

Series	Dimensions	
	A	B
0S	0.6	2.2
1S	0.8	3.0

303

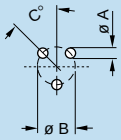

Series	Dimensions		
	A	B	C
0S	0.6	2.8	45°
1S	0.8	3.5	45°
2S	0.8	5.5	60°

304

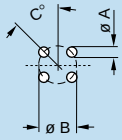

Series	Dimensions		
	A	B	C
0S	0.6	2.8	45°
1S	0.8	3.5	45°
2S	0.8	5.0	45°

305

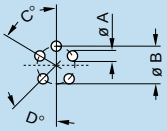

Series	Dimensions			
	A	B	C	D
1S	0.8	3.5	60°	45°
2S	0.8	5.5	60°	60°

306

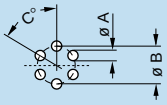

Series	Dimensions		
	A	B	C
1S	0.8	3.5	60°
2S	0.8	5.5	60°
3S	0.8	6.5	60°

307

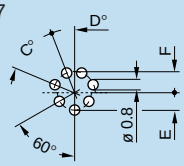

Series	Dimensions			
	C	D	E	F
2S	45°	22°30'	2.75	3.25
3S	45°	22°30'	3.25	3.90

Note: All views are from the side of the receptacle.

308

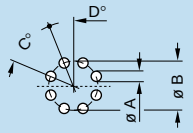

Series	Dimensions			
	A	B	C	D
2S	0.8	6.5	45°	22°30'
3S	0.8	7.8	45°	22°30'

310

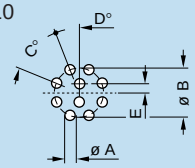

Series	Dimensions				
	A	B	C	D	E
2S	0.8	6.5	45°	22°30'	1.25
3S	0.8	7.8	45°	22°30'	1.50

3S.312

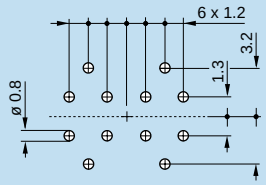

3S.313

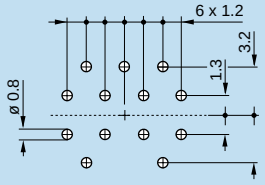

3S.314

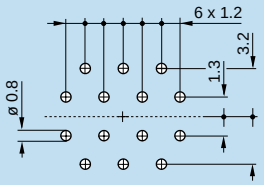

3S.316

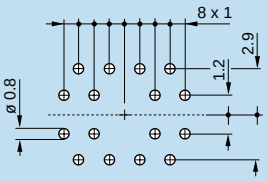

3S.318

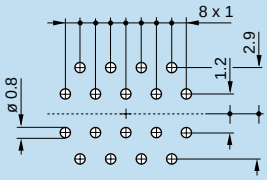

Length of straight printed circuit contacts (for receptacle E●●)

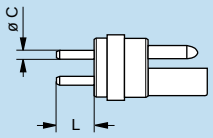

	Type	Dimensions	
		ø C	L
0S	302	0.7	3.0
	303	0.5	3.0
	304	0.5	3.0
1S	302	0.7	3.0
	303/304/305	0.7	3.0
	305/306	0.5	3.0
2S	303/304/305	0.8	3.0
	306/307	0.8	3.0
	307/308/310	0.7	3.0
3S	305/306/307/308/310	0.7	3.0
	312/313/314	0.7	3.0
	316/318	0.7	3.0

Note: This table does not apply for HGP and EHP receptacles and for FAA plugs.

Elbow receptacle (90°) for printed circuit (S series)

P22 P23

Note: All dimensions are in millimeters.

P22 - EPL - EXP
Solder mount

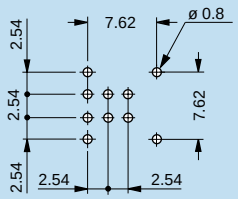

P22 - EPL - EXP
Screw mount

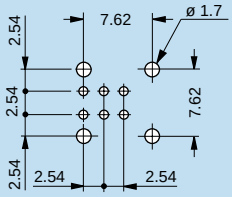

P23 - EPL.0S.116

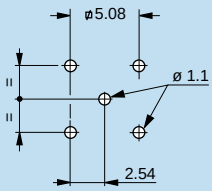

Data Subject to Change

Fixed receptacle with elbow printed circuit contact (S series)

P24

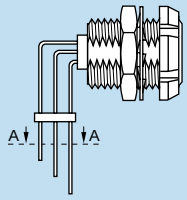

302

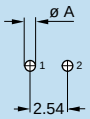

Series	Dim. A
0S	0.7
1S	0.9

303

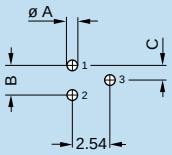

Series	Dimensions		
	A	B	C
0S	0.7	2.00	1.00
1S	0.7	2.48	1.24

304

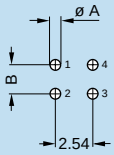

Series	Dimensions	
	A	B
0S	0.7	2.00
1S	0.7	3.50
2S	0.9	3.50

1S.305

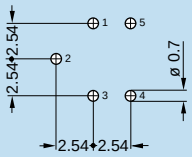

1S.306

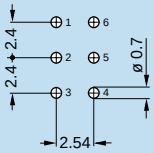

2S.306

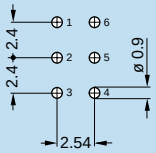

2S.307

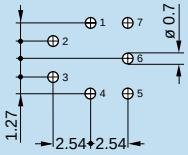

2S.308

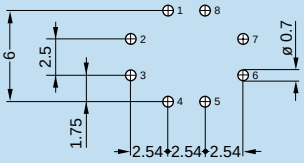

2S / 3S.310

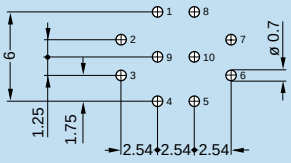

3S.312

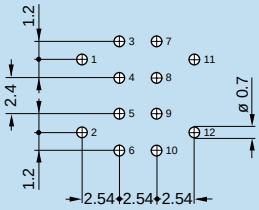

3S.314

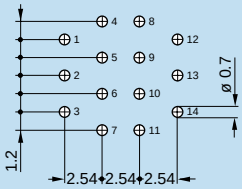

3S.316

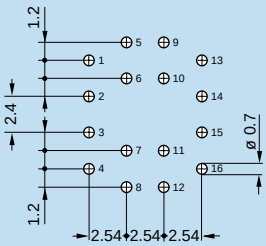

Cable fixing

Cables are fixed into LEMO connectors with cable collet systems. These collets with latches have a design which is very similar to those used for tool machines. This solution guarantees excellent cable retention and ensures perfectly symmetrical deformation of the cable.

The 00 multicontact series is also available with hexagonal crimping (MIL-C-22520F).

Material and treatment

Component	Material (standard)	Surface treatment (µm)				
		Nickel		Gold		
		Cu	Ni	Cu	Ni	Au
Center piece	Brass (UNS C 38500)	0.5	3	–	–	–
Collet	Brass (UNS C 38500)	0.5	3	–	–	–
Crimp ferrule	Copper (UNS C 18700)	0.5	3	0.5	3	0.5
Reducer	Brass (UNS C 38500)	0.5	3	–	–	–
Reducing cone	Brass (UNS C 38500)	0.5	3	–	–	–
Grounding cone	Brass (UNS C 38500)	0.5	3	–	–	–
Metal washer	Brass (UNS C 38500)	0.5	3	–	–	–
Gasket	Silicone MQ/MVQ	–				
	FPM (Viton®)					

Notes:
Standards for surface treatment are as follows:
Nickel-plated: FS QQ-N-290A.

Cable clamping

Type C cable clamping (S and 2C series)

This system includes an grounding center-piece ③ or ④ and a collet ② which is compressed by the collet nut ① to ensure a good clamping to the cable. When assembling the cable, the cable shield is gripped between the grounding center-piece and the collet. The grounding center-piece design depends on the connector type:
– In one single part with opening ③ for S and E series single contact and multicontact series with contacts only on the circumference of the insulator;
– In two parts ④ for multicontact type connectors with contacts on the circumference and the center of the insulator.

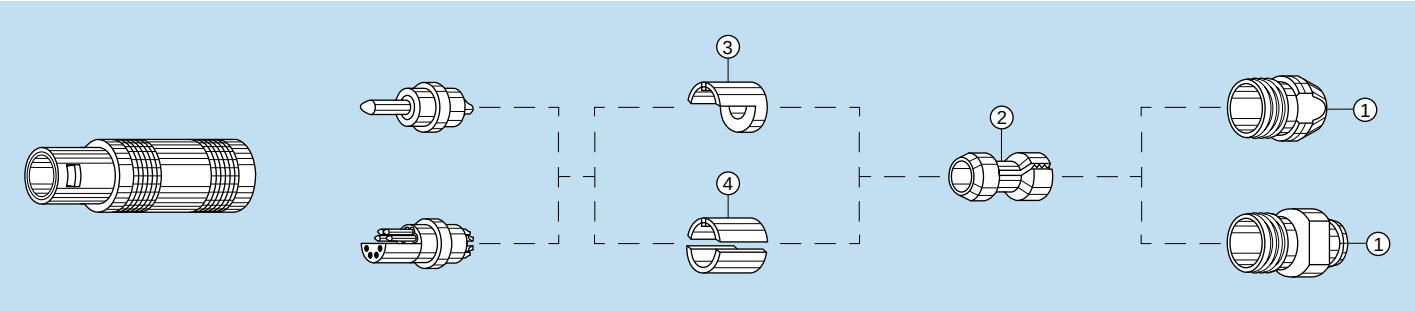

Type D cable clamping (FFL model 2S series)

This clamping system is assembled onto FFL plugs designed for crimp contacts. It includes the same components as the B series, see page 160.

Type L cable clamping (S and 2C series)

This clamping system which includes in one part ② the center-piece and the collet, does not make it possible to connect the cable shield to the connector shell. It is delivered only upon request and can only be assembled onto single contact or multi-contact type connectors. This is the only possible clamping type for the 5S.112 type.

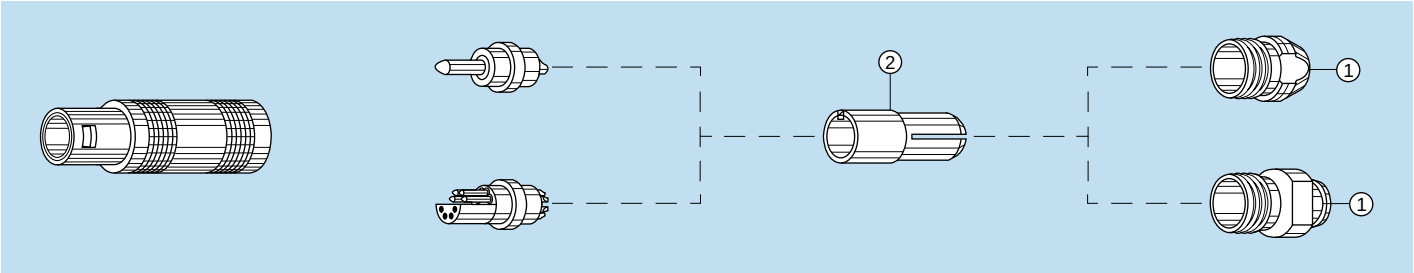

Type K cable clamping (S series)

This clamping system provides for screened or unscreened cables with diameters larger than maximum specified for each series. It includes an oversize collet housing ⑩, the collet ② and the collet nut ① of the next series size up. It requires a long-er split center-piece ④.

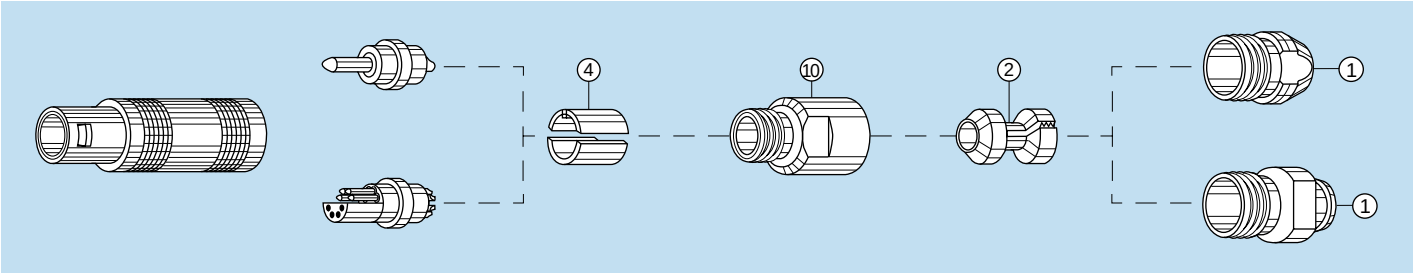

Type E cable clamping (00 single contact series)

This clamping type is specified only for the single contact 00 series. The rear end of the crimp backnut ④ which receives the shield braid is knurled to ensure a good retention of the shield once crimped under the crimp ferrule ①.

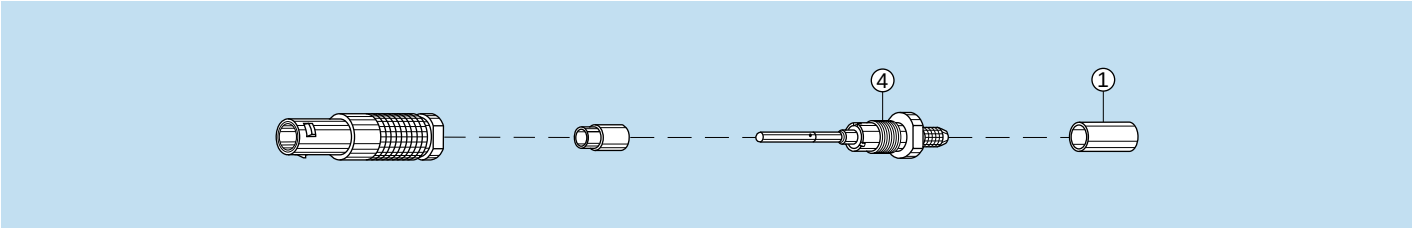

Type D cable clamping (B and 2G series)

This clamping system includes two split insert carriers ④ which position the insulator into the connector and a collet ② which is compressed by the collet nut ① ensuring the cable clamping. When assembling the connector, the cable shield is clamped between the split insert carrier and the collet.

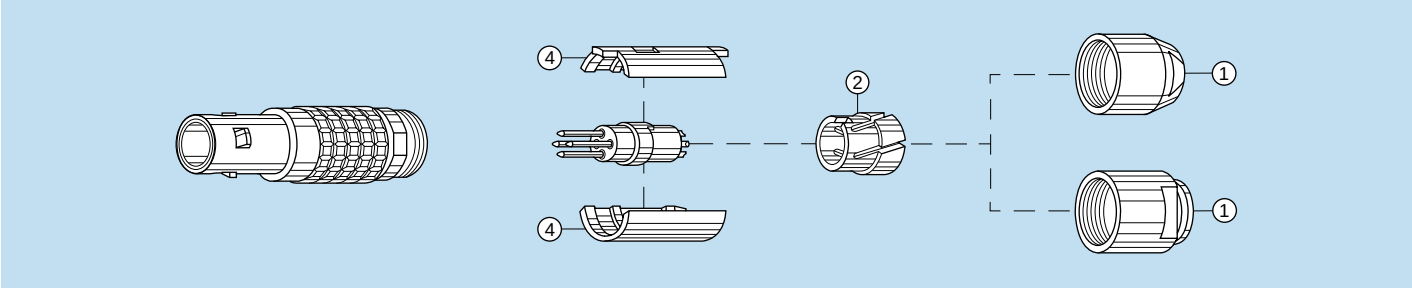

Type M cable clamping (B series)

This clamping system is adapted to cables with a diameter smaller than the smallest diameter specified for each series. It includes a reducer ⑫ , a collet of a smaller series ② and a reducing cone ⑪ .
These parts have the same function as the D type collet.

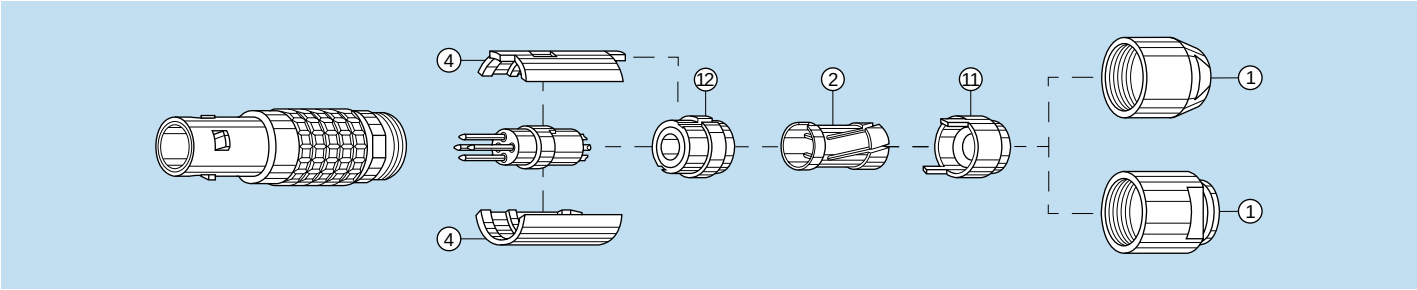

Technical Tables

Table of Wire Gauges

AWG	Construction		ø wire max		Wire section	
	Strand no.	AWG/ strand	(mm)	(in)	(mm^2)	(sq in)
4	133	25	6.9596	0.274	21.5925	0.0335
6	133	27	5.5118	0.217	13.5885	0.0211
8	168	30	4.4450	0.175	8.5127	0.0132
8	133	29	4.3942	0.173	8.6053	0.0133
10	105	30	3.3020	0.13	5.3204	0.0082
10	37	26	2.9210	0.115	4.7397	0.0073
10	1	10	2.6162	0.103	5.2614	0.0082
12	65	30	2.5146	0.099	3.2936	0.0051
12	37	28	2.3114	0.091	2.9765	0.0046
12	19	25	2.3622	0.093	3.0847	0.0048
12 [1)]	7	20	2.5400	0.1	3.6321	0.0056
12	1	12	2.0828	0.082	3.3081	0.0051
14	41	30	2.0574	0.081	2.0775	0.0032
14	19	27	1.8542	0.073	1.9413	0.0030
14 [1)]	7	22	2.0828	0.082	2.2704	0.0035
14	1	14	1.6510	0.065	2.0820	0.0032
16 [1)]	65	34	1.5748	0.062	1.3072	0.0020
16	26	30	1.5748	0.062	1.3174	0.0020
16	19	29	1.4986	0.059	1.2293	0.0019
16 [1)]	7	24	1.5494	0.061	1.4330	0.0022
16	1	16	1.3208	0.052	1.3076	0.0020
18 [1)]	65	36	1.2700	0.05	0.8234	0.0013
18 [1)]	42	34	1.2700	0.05	0.8447	0.0013
18	19	30	1.3208	0.052	0.9627	0.0015
18	16	30	1.2954	0.051	0.8107	0.0013
18	7	26	1.2700	0.05	0.8967	0.0014
18	1	18	1.0414	0.041	0.8229	0.0013
20 [1)]	42	36	1.0160	0.04	0.5320	8.2×10^{-4}
20	19	32	1.0414	0.041	0.6162	0.0010
20	10	30	1.0160	0.04	0.5067	7.9×10^{-4}
20	7	28	0.9906	0.039	0.5631	8.7×10^{-4}
20	1	20	0.8382	0.033	0.5189	8.0×10^{-4}
22	19	34	0.8382	0.033	0.3821	5.9×10^{-4}
22	7	30	0.7874	0.031	0.3547	5.5×10^{-4}
22	1	22	0.6604	0.026	0.3243	5.0×10^{-4}
24 [1)]	42	40	0.6604	0.026	0.2045	3.2×10^{-4}
24	19	36	0.6858	0.027	0.2407	3.7×10^{-4}
24	7	32	0.6350	0.025	0.2270	3.5×10^{-4}
24	1	24	0.5588	0.022	0.2047	3.2×10^{-4}
26	19	38	0.5588	0.022	0.1540	2.4×10^{-4}
26	7	34	0.5080	0.02	0.1408	2.2×10^{-4}
26	1	26	0.4318	0.017	0.1281	2.0×10^{-4}
28 [1)]	19	40	0.4318	0.017	0.0925	1.4×10^{-4}
28	7	36	0.4064	0.016	0.0887	1.4×10^{-4}
28	1	28	0.3302	0.013	0.0804	1.2×10^{-4}
30	7	38	0.3302	0.013	0.0568	8.8×10^{-5}
30	1	30	0.2794	0.011	0.0507	7.9×10^{-5}
32	7	40	0.2794	0.011	0.0341	5.3×10^{-5}
32	1	32	0.2286	0.009	0.0324	5.0×10^{-5}
34	1	34	0.1693	0.007	0.0201	3.1×10^{-5}
36	1	36	0.127	0.005	0.0127	2.0×10^{-5}
38	1	38	0.1016	0.004	0.0081	1.3×10^{-5}
40	1	40	0.078	0.003	0.0049	7.5×10^{-6}

Table of wire gauges according to IEC-228 standard

Conductor no x Ø (mm)	Max Ø (mm)	Max Ø (in)	Section (mm^2)	Section (sq in)
196 x 0.40	7.50	0.295	25.00	0.0387
7 x 2.14	6.10	0.240	25.00	0.0387
125 x 0.40	6.00	0.236	16.00	0.0248
7 x 1.72	4.90	0.192	16.00	0.0248
1 x 4.50	4.50	0.177	16.00	0.0248
80 x 0.40	4.70	0.155	10.00	0.0155
7 x 1.38	3.95	0.155	10.00	0.0155
1 x 3.60	3.60	0.141	10.00	0.0155
84 x 0.30	3.70	0.145	6.00	0.0093
7 x 1.50	3.15	0.124	6.00	0.0093
1 x 2.76	2.76	0.108	6.00	0.0093
56 x 0.30	2.80	0.110	4.00	0.0062
7 x 0.86	2.58	0.098	4.00	0.0062
1 x 2.25	2.25	0.082	4.00	0.0062
50 x 0.25	2.15	0.084	2.50	0.0038
7 x 0.68	2.04	0.080	2.50	0.0038
1 x 1.78	1.78	0.070	2.50	0.0038
30 x 0.25	1.60	0.062	1.50	0.0023
7 x 0.52	1.56	0.061	1.50	0.0023
1 x 1.14	1.40	0.055	1.50	0.0023
32 x 0.20	1.35	0.053	1.00	0.0015
7 x 0.43	1.29	0.050	1.00	0.0015
1 x 1.15	1.15	0.045	1.00	0.0015
42 x 0.15	1.20	0.047	0.75	0.0011
28 x 0.20	1.15	0.045	0.75	0.0011
1 x 1.0	1.00	0.039	0.75	0.0011
28 x 0.15	0.95	0.037	0.50	7.7×10^{-4}
16 x 0.20	0.90	0.035	0.50	7.7×10^{-4}
1 x 0.80	0.80	0.031	0.50	7.7×10^{-4}
7 x 0.25	0.75	0.029	0.34	5.2×10^{-4}
1 x 0.60	0.60	0.023	0.28	4.3×10^{-4}
14 x 0.15	0.75	0.029	0.25	3.8×10^{-4}
7 x 0.20	0.65	0.023	0.22	3.4×10^{-4}
18 x 0.10	0.50	0.019	0.14	2.1×10^{-4}
14 x 0.10	0.40	0.015	0.11	1.7×10^{-4}
21 x 0.07	0.40	0.015	0.09	1.3×10^{-4}
14 x 0.10	0.40	0.015	0.09	1.3×10^{-4}

Note: [1)] Not included in the standard

Conversion Tables — millimeters/inches

(mm)	(in)	(mm)	(in)	(mm)	(in)	(mm)	(in)	(mm)	(in)	(mm)	(in)
0.02	0.0007	1.37	0.0539	3.90	0.1535	8.90	0.3504	16.00	0.6299	29.50	1.1614
0.03	0.0011	1.40	0.0551	4.00	0.1575	9.00	0.3543	16.10	0.6338	30.00	1.1811
0.10	0.0039	1.50	0.0590	4.36	0.1716	9.40	0.3701	17.00	0.6693	30.80	1.2125
0.16	0.0062	1.52	0.0598	4.50	0.1771	9.50	0.3740	17.50	0.6889	31.00	1.2204
0.18	0.0071	1.60	0.0629	5.00	0.1968	9.60	0.3779	17.80	0.7007	31.80	1.2519
0.20	0.0078	1.70	0.0669	5.08	0.1999	9.70	0.3818	18.00	0.7086	32.00	1.2598
0.30	0.0118	1.71	0.0673	5.20	0.2047	10.00	0.3937	18.20	0.7165	33.00	1.2992
0.40	0.0157	1.80	0.0708	5.37	0.2114	10.30	0.4055	18.50	0.7283	33.50	1.3188
0.48	0.0188	2.00	0.0787	5.50	0.2165	10.40	0.4094	19.00	0.7480	34.00	1.3385
0.50	0.0196	2.10	0.0826	5.80	0.2283	10.50	0.4134	19.50	0.7677	34.50	1.3582
0.51	0.0201	2.20	0.0866	6.00	0.2362	10.70	0.4212	20.00	0.7874	35.70	1.4055
0.54	0.0212	2.42	0.0953	6.20	0.2441	10.80	0.4252	20.50	0.8071	36.00	1.4173
0.60	0.0236	2.50	0.0984	6.30	0.2480	11.00	0.4331	20.60	0.8110	40.00	1.5748
0.70	0.0275	2.60	0.1023	6.40	0.2519	11.50	0.4527	21.00	0.8267	41.00	1.6141
0.80	0.0315	2.70	0.1063	6.50	0.2559	11.70	0.4606	21.50	0.8464	42.00	1.6535
0.86	0.0338	2.80	0.1102	6.80	0.2677	12.00	0.4724	21.80	0.8582	43.00	1.6929
0.87	0.0342	2.95	0.1161	7.00	0.2755	12.60	0.4961	22.00	0.8661	45.00	1.7716
0.90	0.0354	3.00	0.1181	7.10	0.2795	12.90	0.5078	23.00	0.9055	45.50	1.7913
0.91	0.0358	3.05	0.1201	7.40	0.2913	13.00	0.5118	23.80	0.9370	46.50	1.8307
0.95	0.0374	3.10	0.1220	7.50	0.2952	13.70	0.5393	24.00	0.9448	50.00	1.9685
1.00	0.0393	3.20	0.1259	8.00	0.3149	14.00	0.5512	25.00	0.9842	60.00	2.3622
1.21	0.0476	3.30	0.1299	8.30	0.3267	14.30	0.5629	25.50	1.0039	65.00	2.5590
1.29	0.0507	3.50	0.1378	8.60	0.3385	14.50	0.5708	26.00	1.0236	70.00	2.7559
1.30	0.0512	3.78	0.1488	8.70	0.3425	15.00	0.5905	28.00	1.1023	78.00	3.0708
1.32	0.0519	3.80	0.1496	8.80	0.3464	15.50	0.6102	28.50	1.1220	150.00	5.9055

Data Subject to Change

Terms and Conditions

1. Acceptance: If Buyer's order contains written, printed or stamped provisions or conditions inconsistent with the written, printed or stamped provisions of this Agreement attached hereto, the provisions and conditions of this Agreement shall prevail. Buyer shall contact LEMO USA within 10 days of receipt of LEMO USA Terms and Conditions if any objection is raised. Failure of Buyer to timely object shall be deemed an acceptance by Buyer of LEMO USA's Terms and Conditions. If a timely objection is raised by the Buyer to the LEMO USA Terms and Conditions, the order(s) will not be entered until agreement in writing is reached. All orders are subject to acceptance by Seller. Seller's acceptance is expressly conditional upon Buyer's acceptance of LEMO USA Terms and Conditions.

2. Pricing: Prices are based on continuous manufacture rates of delivery specified. Buyer will be charged any direct additional cost to which Seller is put by reason of any interruption of production due to Buyer's request, act or default.

3. Applicable Law: Purchase Order is subject to the applicable provisions of the Uniform Commercial Code, under the laws of the State of California.

4. Buyer's Liability: Buyer is liable for all costs associated with completed units, shipped or unshipped, labor and materials on work in process, and raw materials on hand and/or specific to Buyer's Order and all reasonable direct damages, for lead time specified in advance of requested date of cancellation.

5. License: The submission of a quotation or order acknowledgment does not grant or imply a license under any patents now owned or controlled by Seller, or which may become owned or controlled by Seller.

6. Buyer's Default: In the event Buyer cancels the contract embodied by Buyer's Order and this acceptance thereof, in whole or in part, or such contract is canceled by Seller because of default by the Buyer, the Buyer shall pay Seller by reason of such cancellation or default for reasonable direct damages sustained, including costs associated with completed units, shipped or unshipped, labor and materials on work in process, and raw materials on hand and/or specific to Buyer's Order and all reasonable direct damages, for lead time specified in advance of requested date of cancellation, at the current price applicable to the total quantity ordered at the time of default. Notwithstanding the foregoing, if item or items ordered are NON-CANCELABLE/NON-RETURNABLE , the Buyer shall purchase 100% of quantity ordered.

In the event Seller does not meet the confirmed delivery date agreed to with the Buyer as evidenced in writing, Seller shall be allowed one opportunity to reschedule the delivery and Buyer shall not be entitled to cancel the Order for such reason. In the event Seller does not meet said rescheduled delivery, Buyer may cancel the Order and not be in default under the Agreement, including the terms of this Section 6.

7. Indemnity: Buyer hereby specifically agrees to save Seller harmless and indemnify Seller against all claims for damage or profits and for all costs and attorney fees incurred by Seller resulting from any suit or suits arising from alleged infringements of patents, design copyrights, or trademarks with respect to all goods manufactured, either in whole or in part, to Buyer's specifications.

Seller, at its expense, will defend Buyer and its customer against any reasonable and good faith claim based on an allegation that an unaltered LEMO USA product infringes a patent or copyright of another; provided however, that no such obligation shall apply to (i) any LEMO USA product manufactured to Buyer's specifications and/or designs or (ii) any product that has been modified, altered, misused or damaged by Buyer or a third party. Seller shall pay any reasonable resulting costs, damages and attorney's fees finally awarded against Buyer or its customer that are attributable to such claim or will pay the part of any settlement that is attributable to such claim, provided that: (a) Buyer notifies Seller promptly in writing of the claim; (b) Seller is permitted to control the defense or settlement of the claim; and (c) Buyer and its customer cooperate reasonably in such defense or settlement.

8. Returns: All NON-CANCELABLE/NON-RETURNABLE products shall not be returned. Subject to Section D, Subsection 3 of the Distribution Agreement , If Buyer intends to return standard product, a return authorization number is required prior to return shipment and the product may be subjected to a restocking fee. Seller reserves the right not to issue a return authorization. Product must be returned (with shipping costs prepaid) in original packaging and in original condition as when purchased, undamaged, not reconfigured, not obsolete, fit for use, and shall not have been previously shipped from Seller to Buyer or its customer more than one year prior to the date of return. Seller reserves the right to not accept damaged product for credit, replacement, or substitution. If damaged product is accepted by Seller for credit, and damage is caused by the negligence of the Buyer, the Buyer will pay all costs for refurbishment of damaged product. Discovery of product defect and return of product shall be made in the period of time following delivery as provided in the applicable sections of the Uniform Commercial Code. In the event of a return, Seller shall have the right, in its sole discretion, to replace, substitute, or issue a credit to Buyer.

9. Payment: All invoices are delinquent at 30 days past invoice date and will be subject to 1% per month finance charge. Overdue accounts may be placed on credit hold and shipments held. Buyer agrees to pay all reasonable collection charges, including attorney fees, in the event his account is delinquent more than 30 days.

10. Payment Taxes: In the event any sales tax, manufacturer's tax, or other tax is applicable to any shipment made by the Buyer on Buyer's order, such tax shall be added to the selling price and shall be paid by the Buyer.

Data Subject to Change

11. Title/Risk of Loss: All prices are F.O.B. Rohnert Park, California, 1% 10 days/Net 30 days and all Seller obligations hereunder are completed when Seller delivers the items, properly consigned, to a common carrier, Seller's delivery to such carrier shall constitute delivery thereof to the Buyer.

12. Warranties: Seller warrants to Buyer that the Goods will conform to the applicable drawings or design standards. The express warranty set forth in this agreement is exclusive and is in lieu of all other express or implied warranties, but not limited to, warranties of merchantability and fitness for a particular purpose.

EXCEPT AS EXPRESSLY SET FORTH IN THIS AGREEMENT, THE SELLER DISCLAIMS ALL EXPRESS AND IMPLIED WARRANTIES, INCLUDING WITHOUT LIMITATION, ANY IMPLIED WARRANTIES, WARRANTIES OF MERCHANTABILITY AND WARRANTIES OF FITNESS FOR A PARTICULAR PURPOSE OR USE.

13. Disputes and Resolution; Attorney's Fees: The parties agree that any disputes or questions arising hereunder including the construction or application of the Agreement, including these Terms and Conditions shall be settled in the State of California, according to the laws of the State of California. The parties hereto hereby consent to jurisdiction and venue in the Superior Court of Sonoma County, California, and in the Federal District Court for the Northern District of California, with respect to all disputes or disagreements under the Agreement, including these Terms and Conditions and agree that any action with respect to any of the foregoing shall be brought and maintained only in such courts sitting in the Northern District of California or Sonoma County, as appropriate. In any court action at law or in equity, which is brought by one of the parties to enforce or interpret the provisions of the Agreement, including these Terms and Conditions, the prevailing party will be entitled to costs and reasonable attorney's fees, in addition to any other relief to which that party may be entitled.

14. Confidentiality: Both parties acknowledge that during the course of business, each may obtain confidential information regarding the other party's business. Both parties agree to treat all such information as confidential and to take all reasonable precautions against disclosure of such information to unauthorized third parties during and for five (5) years after the term of all orders. Upon request by an owner, all documents relating to the confidential information will be returned to such owner.

15. Assignment: It is agreed by the parties that there will be no assignment or transfer of any order or any interest in any orders. Action by a party in violation of this provision will dismiss the other party from any further obligations arising from any orders.

16. Entire Terms & Conditions: These Terms & Conditions, together with the Agreement contain the entire agreement of the parties and there are no other promises or conditions in any other agreements whether oral or written. This document, together with the Agreement, supersedes any prior written or oral agreements between the parties.

17. Amendment: These Terms & Conditions may be modified or amended if the amendment is made in writing and is signed by both parties; provided however, that the terms of the Agreement shall control in any case where there is a conflict between these Terms & Conditions and the Agreement.

18. Severability: If any provision of these Terms & Conditions shall be held to be invalid or unenforceable for any reason, the remaining provisions shall continue to be valid and enforceable. If a court finds that any provision is invalid or unenforceable, but that by limiting such provision it would become valid and enforceable, then such provision shall be deemed to be written, construed and enforced as so limited.

19. Waiver of Contractual Right: The failure of either party to enforce any provision of these Terms & Conditions shall not be construed as a waiver or limitation of that party's right to subsequently enforce and compel strict compliance with every provision of this Contract.

20. Limitation on Damages: Buyer's consequential or incidental damages for any Seller breach of the contract, except for Seller's gross negligence or willful misconduct, will be limited to the purchase price. Subject to Section 7 hereof, Seller will have no liability to Buyer for any damages, losses, liabilities, injuries, claims, demands or expenses arising out of or directly or indirectly connected with the use of the product. Seller shall not be liable for any exemplary, indirect, incidental, or consequential damages sustained or incurred in connection with the use of the product regardless of the form of action, whether in contract, tort (including negligence) or strict liability.

SELLER SHALL NOT BE LIABLE FOR ANY DAMAGES DUE TO CAUSES BEYOND THE REASONABLE CONTROL OF SELLER OR ATTRIBUTABLE TO ANY SERVICE, PRODUCTS, OR ACTIONS OF ANY PERSON OTHER THAN SELLER REGARDLESS OF THE FORM OF ACTION AND WHETHER OR NOT SUCH DAMAGES ARE FORESEEABLE.

NEITHER PARTY SHALL BE LIABLE IN ANY WAY TO THE OTHER PARTY FOR DELAYS, FAILURE IN PERFORMANCE, OR LOSS OR DAMAGE DUE TO FORCE MAJEURE CONDITIONS SUCH AS: FIRE; LIGHTENING; STRIKE; EMBARGO; EXPLOSION; POWER SURGE OR FAILURE; ACTS OF GOD; WAR; TERRORIST ATTACKS, LABOR DISPUTES; CIVIL DISTURBANCES; ACTS OF CIVIL OR MILITARY AUTHORITY; INABILITY TO SECURE MATERIALS, FUEL, PRODUCTS OR TRANSPORTATION FACILITIES; ACTS OR OMISSIONS OF SUPPLIERS, OR ANY OTHER CAUSES BEYOND ITS REASONABLE CONTROL, WHETHER OR NOT SIMILAR TO THE FOREGOING.

Product Safety Notice

PLEASE READ AND FOLLOW ALL INSTRUCTIONS CAREFULLY AND CONSULT ALL RELEVANT NATIONAL AND INTERNATIONAL SAFETY REGULATIONS FOR YOUR APPLICATION. IMPROPER HANDLING, CABLE ASSEMBLY, OR USE OF CONNECTORS CAN RESULT IN HAZARDOUS SITUATIONS.

1. **SHOCK AND FIRE HAZARD**
   Incorrect wiring, the use of damaged components, foreign objects (such as metal debris), and / or the presence of residue (such as cleaning fluids), can result in short circuits, overheating, and / or risk of electric shock. Mated components should never be disconnected while live as this may result in an exposed electric arc and local overheating, resulting in possible damage to components.

2. **HANDLING**
   Connectors and their components should be visually inspected for damage prior to installation and assembly. Suspect components should be rejected or returned to the factory for verification. Connector assembly and installation should only be carried out by properly trained personnel. Proper tools must be used during installation and / or assembly in order to obtain safe and reliable performance.

3. **USE**
   Connectors with exposed contacts should never be live (or on the current supply side of a circuit). Under general conditions voltages above 30 VAC and 42 VDC are considered hazardous and proper measures should be taken to eliminate all risk of transmission of such voltages to any exposed metal part of the connector.

4. **TEST AND OPERATING VOLTAGES**
   The maximum admissible operating voltage depends upon the national or international standards in force for the application in question. Air and creepage distances impact the operating voltage; reference values are indicated in the catalog however these may be influenced by PC board design and / or wiring harnesses. The test voltage indicated in the catalog is 75% of the mean breakdown voltage; the test is applied at 500 V/s and the test duration is 1 minute.

5. **CE MARKING**
   CE Marking is applied to a complete product or device, and implies that the device complies with one or several European safety directives. CE Marking can NOT be applied to electromechanical components such as connectors.

6. **PRODUCT IMPROVEMENTS**
   The LEMO Group reserves the right to modify and improve to our products or specifications without providing prior notification.

Design Engineering Services

DATE: _____

LEMO creates custom designs to fit your unique application, ranging from connector to multi-component assemblies.

- **Custom Connectors** – Precision designs tested to your specifications
- **Cable Assembly** – Electronic and hybrid fiber optic cable assemblies to meet a wide variety of demanding applications
- **Cable Assembly Integration** – Consultation on routing of cable and connections within your product
- **Rapid Prototyping** – Onsite engineering and rapid prototyping capabilities to assist in the high demands of product development
- **Pro/ENGINEER®** 3D solid CAD models available

Manufacturing Services

Outsource your manufacturing challenges. LEMO's capable engineering staff can create solutions for your cable assembly or component sub-assembly designs.

- **Cable Assembly** – Expertise in both electronic and fiber optic connector termination
- **Overmolding Design and Manufacture** – Custom overmold designs to enhance aesthetics while providing durability and strength
- **Sub-Assembly Build** – Combine our connectors and cable assemblies with your sub-assemblies to provide a tested and proven module

I am interested in:

☐ **Design Engineering Services**
☐ **Manufacturing Services**

Please send me information on:

_____
_____
_____
_____
_____
_____
_____
_____

Name		Rep. Name	
Title	Telephone	Fax	Email
Company Name			
Street			
City	State	Zip	

Please detach and fax directly to LEMO at (707) 578-0869, or mail to LEMO USA, Attn.: Engineering, P.O. Box 2408, Rohnert Park, CA 94927-2408

Data Subject to Change

Custom Interconnect Solutions

DATE: _____ ☐ **BID** ☐ **BUY** ☐ **BUDGETARY**

Name _____ Rep. Name _____

Title _____ Telephone _____ Fax _____ Email _____

Company Name _____

Street _____

City _____ State _____ Zip _____

ASSEMBLY QUANTITIES _____ LENGTH (TIP TO TIP) _____

CONNECTORS: _____
END #1 END #2

STRAIN RELIEF: ☐ NO ☐ YES IF YES, SPECIFY COLOR _____
END #1 END #2

OVERMOLDING: ☐ NO ☐ YES IF YES, PROVIDE DETAILED DRAWING AND MATERIAL SPECIFICATION

WHAT IS YOUR APPLICATION? _____ LENGTH (TIP TO TIP) _____

CUSTOMER SUPPLIED CABLE: ☐ NO ☐ YES IF YES, PLEASE SUPPLY CABLE SPECIFICATIONS _____

IF NO, DO YOU REQUIRE CABLE SELECTION ASSISTANCE? ☐ NO ☐ YES

IF NO, PLEASE PROVIDE PART NUMBER AND MANUFACTURER OF CABLE YOU WISH LEMO TO USE: _____

IF YES, PLEASE FILL IN THE INFORMATION BELOW:

NUMBER OF CONDUCTORS _____ TWISTED PAIRS: ☐ NO ☐ YES WIRE GAUGE: _____

SHIELDING: ☐ NO ☐ YES IF YES, PLEASE SPECIFY TYPE: _____

JACKET MATERIALS / JACKET COLOR (GRAY IS STANDARD)

OPERATING ENVIRONMENT: VOLTAGE: _____ CURRENT: _____ TEMPERATURE RANGE: HIGH: _____ LOW: _____

☐ UNDERWATER: DEPTH: _____

☐ CLEAN ☐ WASH DOWN OR SPLASH ☐ SALT WATER SPRAY ☐ DIRT ☐ OTHER: _____

STERILIZATION: ☐ NO ☐ YES IF YES, NUMBER OF CYCLES: _____

☐ AUTOCLAVING: _____ ☐ RADIATION: TYPE: _____

☐ FLUIDS: TYPE: _____ ☐ CHEMICALS: TYPE: _____

☐ GASES: TYPE: _____

PROTOTYPE ORDER QUANTITY: _____ EXPECTED DELIVERY DATE: _____

PRODUCTION ORDER QUANTITY: _____ EXPECTED DELIVERY DATE: _____

EAU: _____ TARGET PRICING: $ _____

PLEASE ATTACHED DRAWING IF POSSIBLE

Please detach and fax directly to LEMO at (707) 578-0869, or mail to LEMO USA, Attn.: Cable Assembly, P.O. Box 2408, Rohnert Park, CA 94927-2408

Data Subject to Change

Connector Specification Request Form

DATE: _____

Name _____ Rep. Name _____

Title _____ Telephone _____ Fax _____ Email _____

Company Name _____

Street _____

City _____ State _____ Zip _____

Customer Profile

APPLICATION DESCRIPTION: _____

BUDGET: IS THE PROJECT FUNDED? ☐ YES ☐ NO EXPLANATION: _____

SECOND SOURCE: DOES THE CUSTOMER REQUIRE A SECOND SOURCE? ☐ YES ☐ NO

WHY IS LEMO BEING CONSIDERED? DOES LEMO HAVE A COMPETITIVE ADVANTAGE ACKNOWLEDGED BY THE CUSTOMER? _____

Connector Description

SHELL CONFIGURATION: _____ NUMBER OF CONTACTS: _____

SERIES/SIZE: _____ IS BEND RELIEF REQUIRED: ☐ YES ☐ NO

TYPE OF TERMINATION PREFERRED: ☐ SOLDER ☐ CRIMP ☐ PRINTED CIRCUIT ☐ OTHER

JACKET O.D. OF THE CABLE AND TYPE OF MATERIAL: _____

CONDUCTOR DIAMETER OF THE CABLE (AWG) _____ ☐ IF COAX, CABLE TYPE _____

Electrical Characteristics

WORKING VOLTAGE: _____ PEAK: _____ CURRENT (AMPS) _____

IMPEDANCE (OHMS): _____ MAXIMUM VSWR AT MAX. FREQUENCY: _____

WORKING FREQUENCY: NORMAL _____ MAXIMUM _____

NUMBER OF INSERTION CYCLES (1 CYCLE = 1 INSERTION = 1 WITHDRAWL): _____

Environment

OPERATING TEMPERATURES: _____

ENVIRONMENT: ☐ CLEAN ☐ WASH DOWN OR SPLASH ☐ SALT WATER SPRAY ☐ UNDERWATER

☐ DIRT ☐ FLUIDS _____ ☐ DUST ☐ GASES _____

☐ CHEMICALS ☐ IP RATING _____ ☐ EXPLOSIVES ☐ RADIATION

STERILIZATION: ☐ YES ☐ NO METHOD _____ CYCLES _____ TEMP _____

Purchase Projections

PROTOTYPE ORDER QUANTITY (3 OR LESS): _____ EXPECTED DELIVERY DATE: _____

PRODUCTION ORDER QUANTITY: _____ EXPECTED DELIVERY DATE: _____

PREPRODUCTION ORDER QUANTITY: _____ EXPECTED DELIVERY DATE: _____

EXPECTED QUANTITY INVOLVED EACH YEAR: _____ TARGET PRICING: $ _____

APPLICABLE STANDARDS: ☐ UL ☐ IEC ☐ OTHER _____

PLEASE ATTACH DRAWING IF POSSIBLE OR NECESSARY

Please detach and fax directly to LEMO at (707) 578-0869, or mail to LEMO USA, Attn.: Engineering, P.O. Box 2408, Rohnert Park, CA 94927-2408

Data Subject to Change

Located 50 miles north of San Francisco, LEMO USA offers a nationwide network of product specialists, sales consultants and distributors, who work closely with customers in offering sales and technical support.

635 Park Court, Rohnert Park, CA 94928
P.O. Box 2408, Rohnert Park, CA 94927-2408
(800) 444-5366 • (707) 578-8811 • fax: (707) 578-0869
www.lemousa.com • e-mail: info@lemousa.com

1/03 10M