Apr.1.2017 Copyright 2017 HIROSE ELECTRIC CO., LTD. All Rights Reserved.

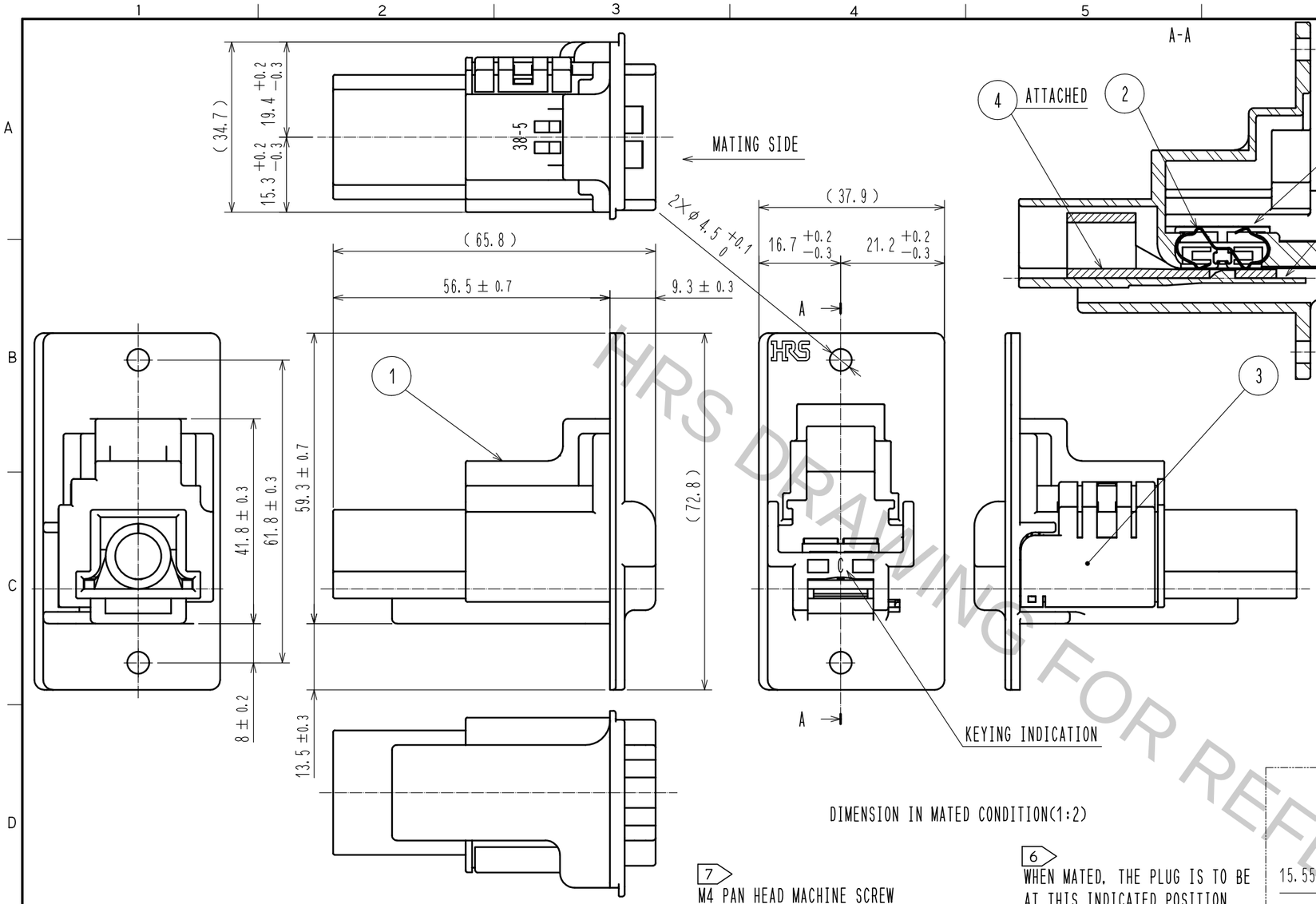

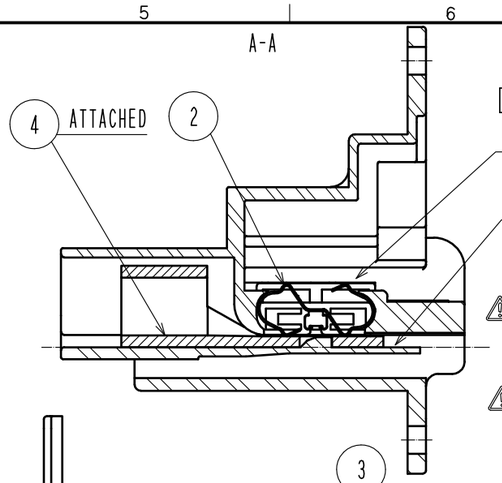

5 REF. No.② IS EXPOSED.

5 REF. No.④ IS EXPOSED.

NOTES 1 RECOMMENDED CRIMPING TOOL:
JIS C9711 IZUMISEIKI CO., LTD. 9H-60 OR REC 150F.

WARNING 2 THE CONNECTOR IS NOT HOT PLUGGABLE.

3 REFER TO ASSEMBLY PROCEDURE MANUAL (ETAD-C0294).

4 REFER TO HANDLING PROCEDURE MANUAL (ETAD-C0307).

WARNING 5 KEEP YOUR FINGERS AND OTHER CONDUCTORS FROM COMING IN CONTACT WITH REF. No.2 AND 4 IN ELECTRICALLY CHARGED CONDITIONS IN ORDER TO AVOID ELECTRICALSHOCK AND SHORT-CIRCUIT.

WARNING 6 MAKE SURE THAT THE CONNECTOR IS INSERTED TO THE END AND LOCKED AS THE INDICATED POSITION WHEN MATED. CONFIRM THAT THE CONNECTOR IS NOT UNINTENTIONALLY RELEASED BY PULLING THE CABLE WITH LIGHT FORCE TO PREVENT INCOMPLETE MATING CONDITION.

7 RECOMMENDED TIGHTENING TORQUE : 1.5 TO 1.6 N・m

8 CRIMP TERMINALS AS SHOWN BELOW ARE ALSO APPLICABLE.
NICHIFU CO.,LTD. R 38-5, JST CO.,LTD. 38-5.
ATTENTIONS PRIOR TO USE :
・DIMENSIONS SHALL SATISFY THAT OF IN REF. No. 4, AND NO DEFORMATION OR CONTAMINATION IS OBSERVED.
・CONTACT RESISTANCE MUST BE BELOW THE STANDARD VALUE.
・USE ONLY TIN PLATING TERMINAL.

WARNING・EVALUATE PRIOR TO USE, AS TIN PLATING CONDITION COULD AFFECT THE PERFORMANCE.

THE RECOMMENDED PANEL CUTOUT(1:2)
(VIEWED FROM MATING SIDE.)

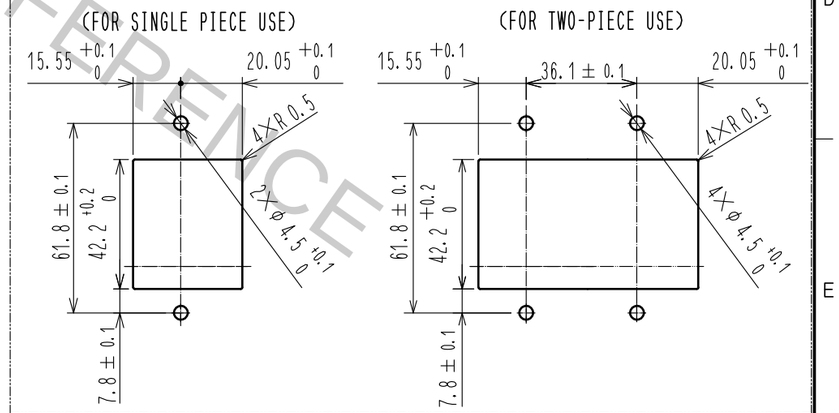

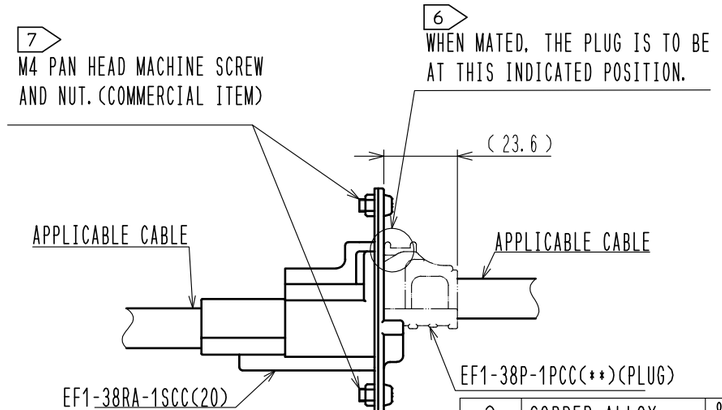

REF. NO. ④

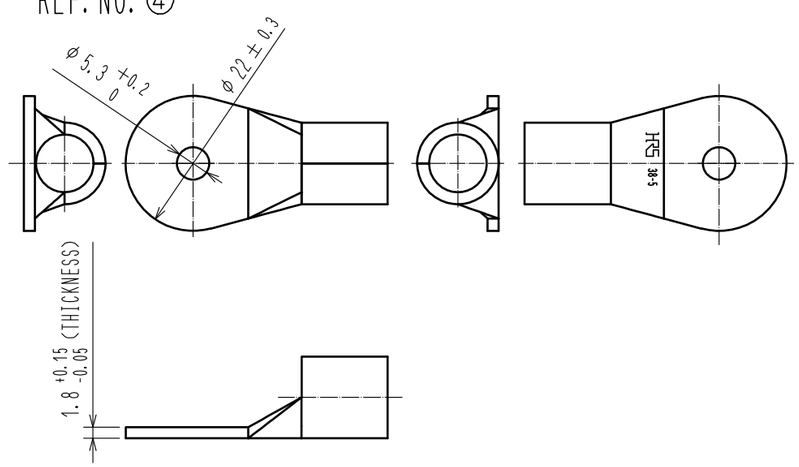

NO.	MATERIAL	FINISH , REMARKS	NO.	MATERIAL	FINISH , REMARKS
2	COPPER ALLOY	OVER PLATING: TIN 1μm min. UNDER PLATING: NICKEL 1μm min.	4	COPPER ALLOY	TIN PLATING 1μm min.
1	PBT	UL94V-0(BLACK)	3	PBT	UL94V-0(BLACK)

UNITS	SCALE	COUNT	DESCRIPTION OF REVISIONS	DESIGNED	CHECKED	DATE
mm	1 : 1	0				

HRS HIROSE ELECTRIC CO., LTD.

APPROVED	: EJ. KUNII	15. 10. 07	DRAWING NO.	EDC-118348-20-00
CHECED	: EJ. KUNII	15. 10. 07	PART NO.	EF1-38RA-1SCC(20)
DESIGNED	: TP. KOMATSU	15. 10. 07	CODE NO.	CL142-0015-8-20
DRAWN	: SY. KONDO	15. 10. 07		0 1/1

HRS DRAWING FOR REFERENCE