BUD	PART NAME	NEMA 4X PLASTIC BOX (PTK SERIES)	PART No.	PTK-18428 & PTK-18428-C	REVISION DATE	10-19-17

DRAWING FOR REFERENCE

WE RESERVE THE RIGHT TO MAKE CHANGES TO OUR STANDARD PRODUCTS. PLEASE CONSULT WITH BUD INDUSTRIES PRIOR TO USING THIS DRAWING FOR DESIGN PURPOSE.

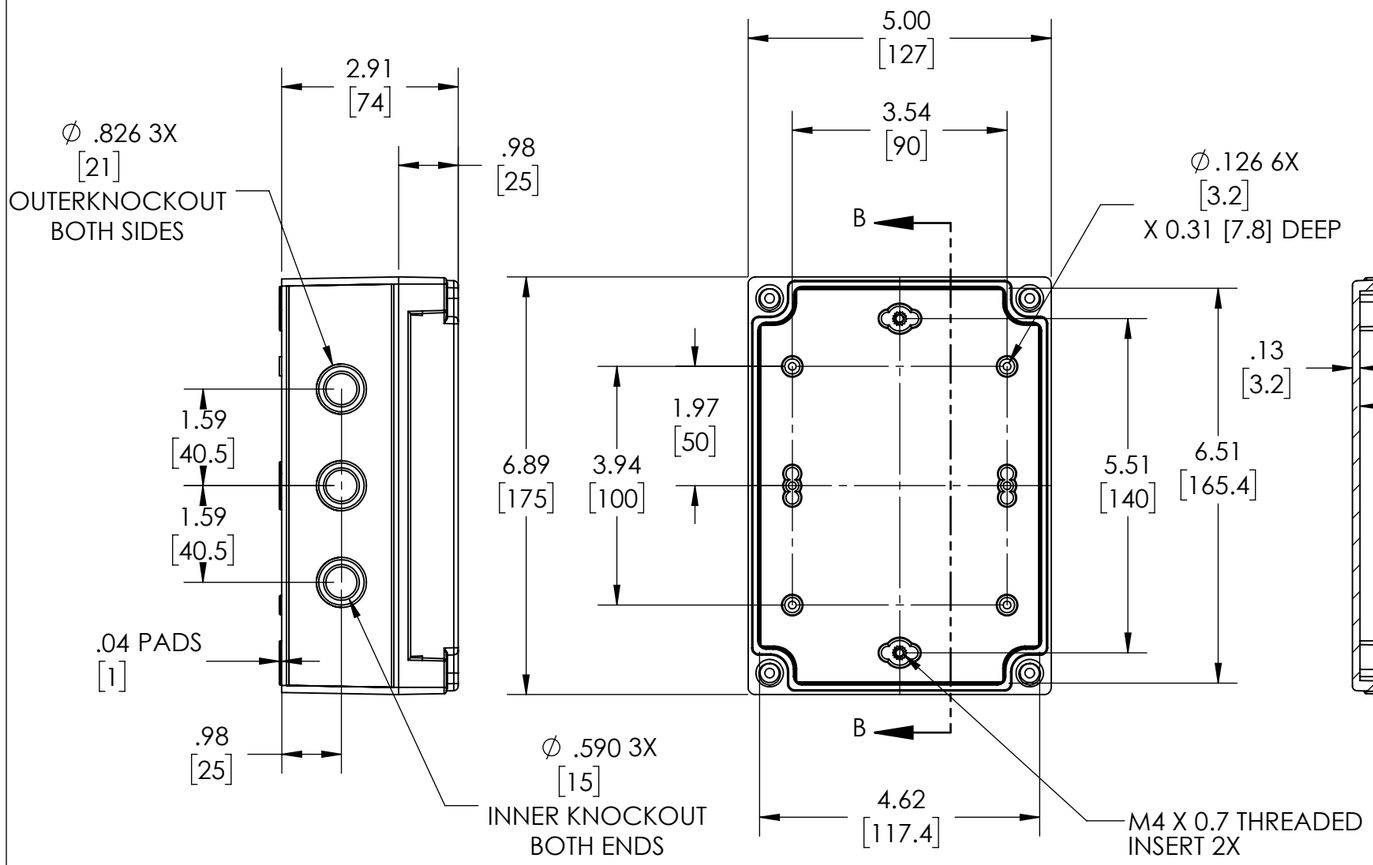

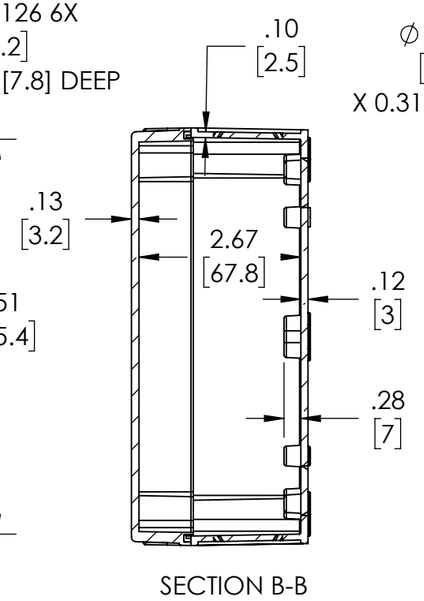

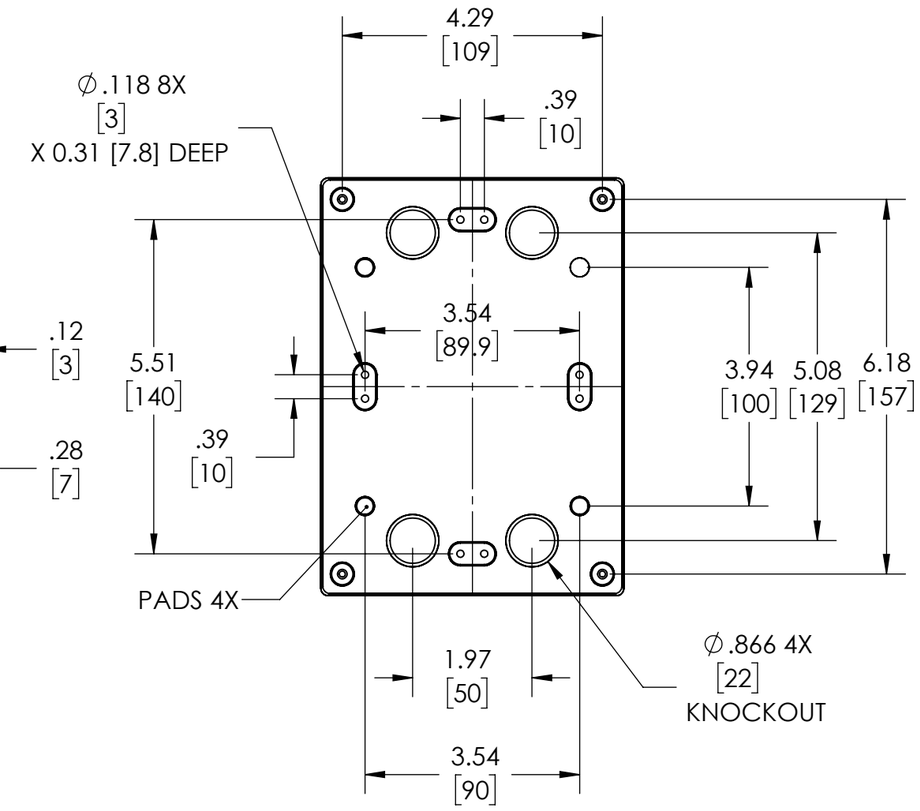

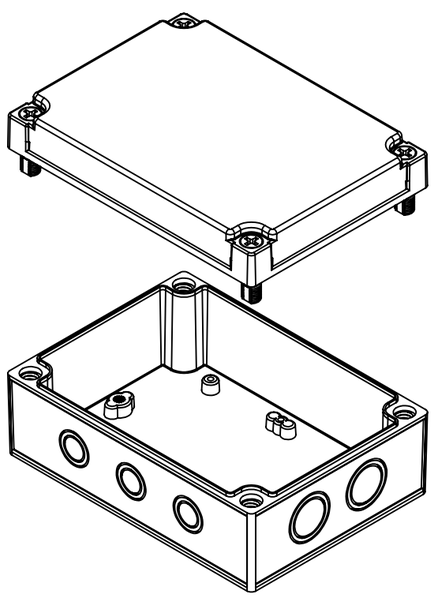

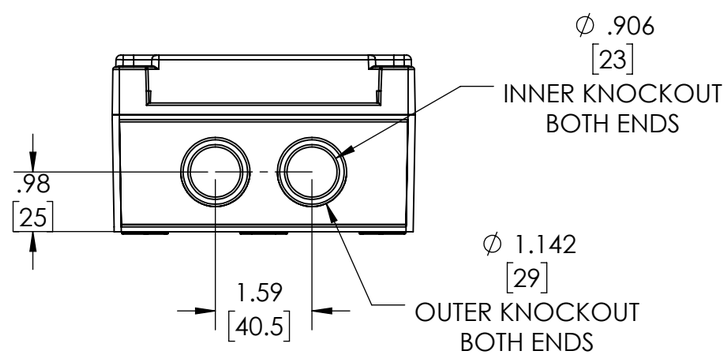

NOTES:

1- MATERIAL: BODY - GRAY POLYCARBONATE RESIN 10% GLASS FIBER FILLED
COVER - GRAY OR CLEAR (-C SUFFIX) POLYCARBONATE

2- UL508 / NEMA TYPE 4X & TYPE 6 WITH IP-67 TUV RATING & UL-94 5VA

3- CONTINUOUS POURED FOAM GASKET IN COVER

4- COVER ATTACHES WITH NON-METALLIC CAPTIVE SCREWS

5- SUPPLIED WITH TWO M4 x 8mm LG. TRUSS HEAD ZINC PLATED STEEL SCREWS (ITEMS NOT SHOWN)

6- DIMENSIONS ARE INCH [MM]

OPTIONAL ACCESSORIES:
INTERNAL STEEL PANEL #PTX-18428
INTERNAL PLASTIC PANEL #PTX-18428-P
MOUNTING BRACKET KIT (STAINLESS STEEL) - #NBX-10922
MOUNTING BRACKET KIT (PLASTIC) #PIX-4117