SHEET OF

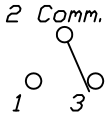

CIRCUIT: SPDT
CONTACT CONFIGURATION

SWITCH FUNCTION		
POS. 1	POS. 2	POS. 3
ON	NONE	ON
2-3	OPEN	2-1

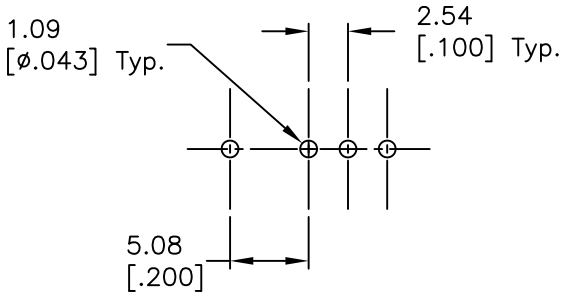

RECOMMENDED PCB LAYOUT

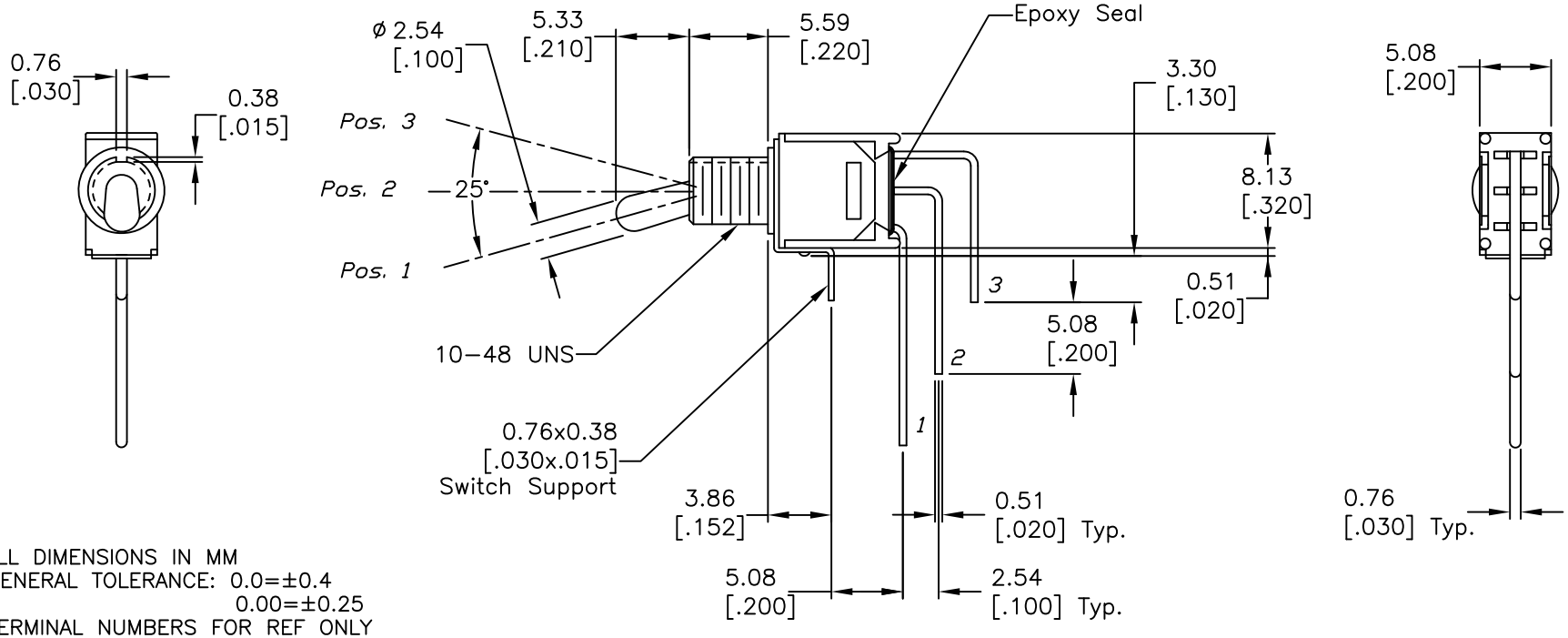

NOTES:

1. ALL DIMENSIONS IN MM
2. GENERAL TOLERANCE: 0.0=±0.4
   0.00=±0.25
3. TERMINAL NUMBERS FOR REF ONLY
4. RATING: 3 AMPS @ 120VAC OR 28VDC;
   1 AMP @ 250VAC
5. ELECTRIC LIFE: 30,000 make-and-break cycles
   at full load.
6. INSULATION RESISTANCE: 1,000 Mega-ohm min.
7. DIELECTRIC STRENGTH: 1,000 V RMS @sea level.
8. OPERATING TEMP.: -30°C to 85°C

REV.	ECN No.	DESCRIPTION	DATE	CHKD
A	10670	RELEASED FOR PRODUCTION	6-8-00	GLG

THE INFORMATION CONTAINED IN THIS DOCUMENT IS PROPRIETARY TO E-SWITCH AND IS NOT TO BE COPIED OR TRANSFERRED

E-SWITCH®

TITLE 200MSP1T2B3M7QE

SCALE	DATE	DR	DWG	REV
2:1	6-8-00	GLG	T211017	A